This is a digital copy of a book that was preserved for generations on library shelves before it was carefully scanned by Google as part of a project to make the world's books discoverable online.

It has survived long enough for the copyright to expire and the book to enter the public domain. A public domain book is one that was never subject to copyright or whose legal copyright term has expired. Whether a book is in the public domain may vary country to country. Public domain books are our gateways to the past, representing a wealth of history, culture and knowledge that's often difficult to discover.

Marks, notations and other marginalia present in the original volume will appear in this file - a reminder of this book's long journey from the publisher to a library and finally to you.

Usage guidelines

Google is proud to partner with libraries to digitize public domain materials and make them widely accessible. Public domain books belong to the public and we are merely their custodians. Nevertheless, this work is expensive, so in order to keep providing this resource, we have taken steps to prevent abuse by commercial parties, including placing technical restrictions on automated querying.

We also ask that you:

+ *Make non-commercial use of the files* We designed Google Book Search for use by individuals, and we request that you use these files for personal, non-commercial purposes.
+ *Refrain from automated querying* Do not send automated queries of any sort to Google's system: If you are conducting research on machine translation, optical character recognition or other areas where access to a large amount of text is helpful, please contact us. We encourage the use of public domain materials for these purposes and may be able to help.
+ *Maintain attribution* The Google "watermark" you see on each file is essential for informing people about this project and helping them find additional materials through Google Book Search. Please do not remove it.
+ *Keep it legal* Whatever your use, remember that you are responsible for ensuring that what you are doing is legal. Do not assume that just because we believe a book is in the public domain for users in the United States, that the work is also in the public domain for users in other countries. Whether a book is still in copyright varies from country to country, and we can't offer guidance on whether any specific use of any specific book is allowed. Please do not assume that a book's appearance in Google Book Search means it can be used in any manner anywhere in the world. Copyright infringement liability can be quite severe.

About Google Book Search

Google's mission is to organize the world's information and to make it universally accessible and useful. Google Book Search helps readers discover the world's books while helping authors and publishers reach new audiences. You can search through the full text of this book on the web at `http://books.google.com/`

Library
of the
University of Wisconsin

CHARLES GRIFFIN & CO., LTD., PUBLISHERS

In Handsome Cloth. Very Fully Illustrated.

THE AEROPLANE

A CONCISE SCIENTIFIC STUDY

By A. FAGE, A.R.C.Sc.

ROYAL EXHIBITIONER; AERONAUTICS RESEARCH SCHOLAR OF THE IMPERIAL COLLEGE OF SCIENCE AND INDUSTRY.

CONTENTS

The Wind—Stream-line Bodies and Struts—Aeroplane Wings—Construction of Aeroplanes—Equilibrium—Stability—Propellers—Engines—Index.

This volume will be found to be of the greatest interest and value to Designers of Aeroplanes, Flying Men, and others interested in Aeronautics; the subject is thoroughly yet concisely handled, each chapter being an epitome of the knowledge available on its subject, with indications as to further development.

Detailed Prospectus may be had post free on application to the Publishers.

LONDON: CHARLES GRIFFIN & CO., LTD., EXETER STREET, STRAND

AERO ENGINES.

CHARLES GRIFFIN & CO., LTD., PUBLISHERS.

SECOND ED., Revised. In Large 8vo. Cloth. Pp. i-x+131. Many Illustrations.

THE PROBLEM OF FLIGHT.

A TEXT-BOOK OF AERIAL ENGINEERING.

BY HERBERT CHATLEY, B.SC. ENG. (LOND.),
Professor of Civil Engineering, Tong Shan Engineering College, N. China.

"An epitome of the knowledge available on the subject."—*Scotsman.*

In Crown 8vo, Cloth. Pp. i-viii+83. Illustrated with Diagrams.

THE FORCE OF THE WIND.

BY HERBERT CHATLEY, B.SC. ENG. (LOND.),

"Could not well be more terse or pointed."—*Symon's Meteorological Magazine.*

In Handsome Cloth. Illustrated. Pocket Size. Pp. i-xi+179.

A COMPENDIUM OF AVIATION AND AEROSTATION,

Balloons, Dirigibles, and Flying Machines.

BY LIEUT.-COL. H. HOERNES.

Translated and Supplemented with Facts of Interest to English readers—*i.e.*, details regarding British Dirigibles, Aeroplanes, Flying Grounds, etc.—with an Introduction and Biographical Sketch of the Author by J. H. LEDEBOER, Editor of *Aeronautics.*

"A very readable popular handbook."—*Nature.*

FIFTH EDITION, Revised and Enlarged. Pp. i-xxiii+639. With 243 Illustrations.
Large 8vo, Handsome Cloth.

A TEXT-BOOK ON GAS, OIL, & AIR ENGINES.

BY BRYAN DONKIN, M.INST.C.E., M.INST.MECH.E.

Revised throughout by T. GRAVES SMITH. With important New Matter by Prof. BURSTALL.

"A very much up-to-date classic."—*Daily Telegraph.*

In Demy 8vo. Pp. i-xiv+237. With Illustrations.

EVOLUTION OF THE INTERNAL COMBUSTION ENGINE.

BY EDWARD BUTLER, MECHANICAL ENGINEER.

"The Author's experience gives him excellent qualifications for the task he has undertaken . . . all who are interested in the practical working of combustion engines will find this volume interesting and worthy of a place on their bookshelf."—*Mechanical Engineer.*

In Medium 8vo. Handsome Cloth. Pp. i-viii+140. With 142 Illustrations.

A TREATISE ON THE GAS TURBINE.

Theory, Construction, and Working Results of Two Machines in Actual Use.

BY HANS HOLZWARTH.

With Additional Tests for the English Edition.

Translated by A. P. CHALKLEY, B.SC., A.M.INST.C.E., A.I.E.E.

"From all points of view a welcome and valuable addition to the literature of the problem."—*Nature.*

In Handsome Cloth. Pp. i-iv+262. With 93 Illustrations.

THE GAS TURBINE.

Progress in Design and Construction.

BY HENRY HARRISON SUPLEE, B.SC.

"Will be of considerable assistance to gas power engineers."—*Gas World.*

In Demy 8vo. Handsome Cloth. Pp. i-xi+176. With 130 Illustrations.

CARBURETTORS, VAPORISERS, & VALVES,

USED IN INTERNAL COMBUSTION ENGINES.

BY EDWARD BUTLER.

"Mr Butler writes with an intimate practical knowledge of his subject, and the book is one we have every pleasure in recommending."—*Mechanical Engineer.*

LONDON: CHARLES GRIFFIN & CO., LTD., EXETER STREET, STRAND.
PHILADELPHIA: J. B. LIPPINCOTT COMPANY.

AERO ENGINES:

WITH A GENERAL INTRODUCTORY ACCOUNT OF THE THEORY OF THE INTERNAL-COMBUSTION ENGINE.

BY

G. A. BURLS, M.INST.C.E.,

MEMBER OF THE INSTITUTION OF AUTOMOBILE ENGINEERS;
WHITWORTH EXHIBITIONER.

With 76 Illustrations,
Including 5 Folding Plates.

LONDON:
CHARLES GRIFFIN & COMPANY, LIMITED.
PHILADELPHIA: J. B. LIPPINCOTT COMPANY.
1915.

646073

199816
DEC -2 1915
STS
·B92

PREFACE.

A SHORT course of lectures on Aero Engines was given by the author at the Northampton Polytechnic Institute during 1914. On the suggestion of Mr Charles E. Larard, M.Inst.C.E., M.I.M.E., Head of the Engineering Department, the matter contained in these lectures — necessarily somewhat rearranged and largely extended—is now issued in book form, in the hope that it may be found of assistance to a wider circle of readers.

The engines are classified as Horizontal, Radial, Diagonal, Vertical, and Rotary; after some preliminary theoretical matter, one or two typical engines of each of these five classes are illustrated and described in some detail. This is thought to be preferable to the alternative of giving very brief references to a larger number of the exceedingly numerous aero engines that have already appeared.

The author desires to express his thanks for assistance rendered to him by the following gentlemen and companies: Messrs C. E. Larard; Col. H. C. L. Holden, C.B.; Basil Joy; O. Paul Monckton; The Austro-Daimler Co.; The Milnes-Daimler-Mercédès Co.; The Gnome Engine Co.; The Green Engine Co.; The Wolseley Co.; The Anzani Engine Co.; The Salmson Engine Co.; and the Proprietors of *Flight* and *The Engineer*.

G. A. B.

4 LLOYD'S AVENUE, E.C.

CONTENTS.

CHAPTER I.

PAGE

Weight; External-Combustion Engines; The Carnot Cycle; impracticable. Internal-Combustion Engines; The Otto, or Four-stroke, Cycle; Further Considerations . . 1

CHAPTER II.

The Power and Efficiency of Internal-Combustion Engines . 32

CHAPTER III.

Aero Engines; Some General Considerations; Necessity for Lightness; The Atlantic Flight; Leading Particulars of the Aero Engines of 1910 44

CHAPTER IV.

Horizontal Aero Engines 53

CHAPTER V.

Radial Aero Engines 57

CHAPTER VI.

Diagonal or "Vee" Aero Engines 97

CHAPTER VII.

Vertical Aero Engines 120

CHAPTER VIII.

Rotary Aero Engines 150

Appendix—Aero Engines of 1914 187

Index 193

LIST OF ILLUSTRATIONS.

FIG.		PAGE
1.	A Comparison of Engine Sizes and Weights	2
2.	Curves of the Form pv^n Constant	6
3.	Diagram of Carnot Air Engine	10
4.	Indicator Diagram of Carnot Air Engine	14
5.	Diagram of a Typical Four-stroke Petrol Engine	19
6.	Diagram of Otto, or Four-stroke Cycle	21
7.	Explosion Diagrams compared	24
8.	Typical Diagram from Four-stroke Engine Cylinder	30
9.	Torque or Turning Effort	35
10.	Power-speed Graph from Normal Petrol Engine	36
11.	Arrangements of Horizontal Opposed Engines	54
12.	Two-cylinder Horizontal Opposed Darracq Engine	55
13.	Sectional Views of Three-cylinder Anzani Fan-type Engine	58
14.	External View of Fan-type Anzani Engine	60
15.	External View of Y Anzani Engine	60
16.	External View of Six-cylinder Anzani Engine	61
17.	Ten-cylinder Anzani Engine on Aeroplane	63
18.	Sectional Diagram of Anzani Engine	66
19.	Anzani Engine with Exhaust "Collector"	69
20.	Radial Engines having eight and nine Cylinders contrasted	70
21.	Diagram of Valve Operation in Anzani Engines	71
22.	Valve Operation of Six-cylinder Anzani Engine	74
23.	Cams of Ten-cylinder Anzani Engine	75
24.	Twenty-cylindered 200 H.P. Anzani Radial Engine	76
25.	Diagram showing Effect of "Offsetting"	77
26.	110 H.P. Salmson Engine	79
27.	Horizontal Salmson Engine	80
28.	Sectional Diagram of Salmson Engine	81
29.	Diagram illustrating Mode of Attachment of Connecting-rods to Crank-pin in Salmson Engine	82
30.	Obliquity of Connecting-rod in Ordinary Arrangement	83
31.	Path of the "Big Ends" in Salmson Engines	85
32.	Water-cooling System of Salmson Engines	87
33.	Lubricating System of Salmson Engines	88
34.	Diagram of Valve Operation of Salmson Engines	91
35.	Firing Order of the Fourteen-cylinder Salmson Engine	93
36.	Diagram of Diagonal or "Vee" Engine	97
37.	External View of Eight-cylinder 120 H.P. Wolseley Engine	101
38.	Sectional View of 120 H.P. Eight-cylinder Wolseley Diagonal Engine, showing Cylinder and Adjuncts	*to face page* 104
39.	Sectional View showing Crankshaft and Camshaft of Wolseley Engine	109

FIG. PAGE
40. Carburettor of Wolseley Engine 110
41. Diagram of Dorman "Vee" Engine 112
42. Diagram of Air-cooled Renault "Vee" Engine 116
43. Eight-cylinder 100 H.P. Panhard "Vee" Engine 119
44. Four-cylinder 35 H.P. Vertical Panhard Engine 122
45. Valves and Valve-operation of Panhard Aero Engine 124
46. Six-cylinder 70 H.P. Chenu Engine 125
47. End View of Six-cylinder Vertical Austro-Daimler Engine 127
48. Six-cylinder Austro-Daimler, Carburettor Side 130
49. Sectional View of Austro-Daimler Aero Engine 131
50. Six-cylinder 100 H.P. Mercédès Engine, Exhaust Side 134
51. Six-cylinder 100 H.P. Mercédès Engine, showing Carburettors . . . 134
52. Eight-cylinder 240 H.P. Mercédès-Daimler Engine 135
53. Eight-cylinder 240 H.P. Mercédès-Daimler Engine 135
54. External View of Six-cylinder 120 H.P. Green Engine, showing Carburettors 138
55. Longitudinal Part Section of Six-cylinder 120 H.P. Vertical Green Aero Engine *to face page* 140
56. Tesranvrse Section of Six-cylinder120H.P. Green Engine 142
56A. End View of Six-cylinder 120 H.P. Green Engine, showing Magneto and Pumps 143
57. Four-cylinder 70 H.P. Inverted Aero Engine of the German Daimler Co. . 145
58. Four-cylinder 100 H.P. Benz Engine 147
59. Seven-cylinder Gnome Rotary Engine, Front View 152
60. Seven-cylinder Gnome Engine, Side View 153
61. Diagrammatic Section of Two-valve Gnome Rotary Engine . . *to face page* 160
62. Fourteen-cylindered Two-crank Gnome Rotary Engine 161
63. Eighteen-cylindered 200 H.P. Gnome Rotary Engine 163
64. Diagrammatic Section of Gnome "Monosoupape" Rotary Engine . *to face page* 166
65. External View of the 80 H.P. Gyro Engine 168
66. Sectional Diagram of Cylinder and Valves of the Gyro Engine . . . 169
67. Eighteen-cylinder 160 H.P. "Le Rhone" Rotary Engine 170
68. The "Straight-line" Hypocycloid 172
69. Ditto, in another aspect 173
70. Diagram illustrating the Burlat Rotary Engine 175
71. Sectional Diagram of 300 H.P. Six-cylinder Demont Double-acting Air-cooled Rotary Engine . . . . . *to face page* 176
72. Diagram of Air-cooled Two-stroke Clerk-cycle Petrol Engine 179
73. Diagram of Air-cooled Two-stroke Two-port Day Petrol Engine . . . 181
74. Lamplough Two-stroke Six-cylinder Rotary Engine 183
75. 50 H.P. Laviator Two-stroke Rotary Engine 184
76. Diagram illustrating Action of Six-cylinder Two-stroke Laviator Rotary Engine 185

AERO ENGINES.

CHAPTER I.

WEIGHT: EXTERNAL-COMBUSTION ENGINES: THE CARNOT CYCLE; IMPRACTICABLE. INTERNAL-COMBUSTION ENGINES: THE OTTO, OR FOUR-STROKE CYCLE: FURTHER CONSIDERATIONS.

MECHANICAL flight—of which man has dreamed since the Athenian Dædalus was fabled to have fitted himself with wings and flown across the Ægean Sea—has at length, in our day, been actually realised.

Within the past hundred years several able investigators have devoted attention to the problem, but the want of a means of obtaining sufficient power output within a very low limit of weight rendered success impossible, and even inconceivable, until the invention and subsequent rapid development of the small high-speed petrol engine, for which the world is so largely indebted to the enterprise, ingenuity, and perseverance of the late Herr Gottlieb Daimler (1834–1900), who retired in 1882 from his post in the great Deutz works in order to devote himself to perfecting the little engines with which his name will ever be honourably associated.

For it is to the small high-speed petrol engine that the final realisation of mechanical flight is entirely due, no prime mover at present known approaching this in respect of the high value of the ratio of power output to weight; reliable petrol engines are now produced in large numbers weighing no more than from about 2½ lbs. to 6 lbs. per brake horse-power when run at the relatively moderate speed of only about 1200 revolutions per minute.

This is truly a miracle of designing and constructive progress,

when it is remembered that the early stationary petrol engines (*circa* 1880) weighed upwards of 1000 lbs. per B.H.P., and even Daimler's small high-speed engines of 1886, running at 800–1000 r.p.m., weighed nearly 90 lbs. per B.H.P.

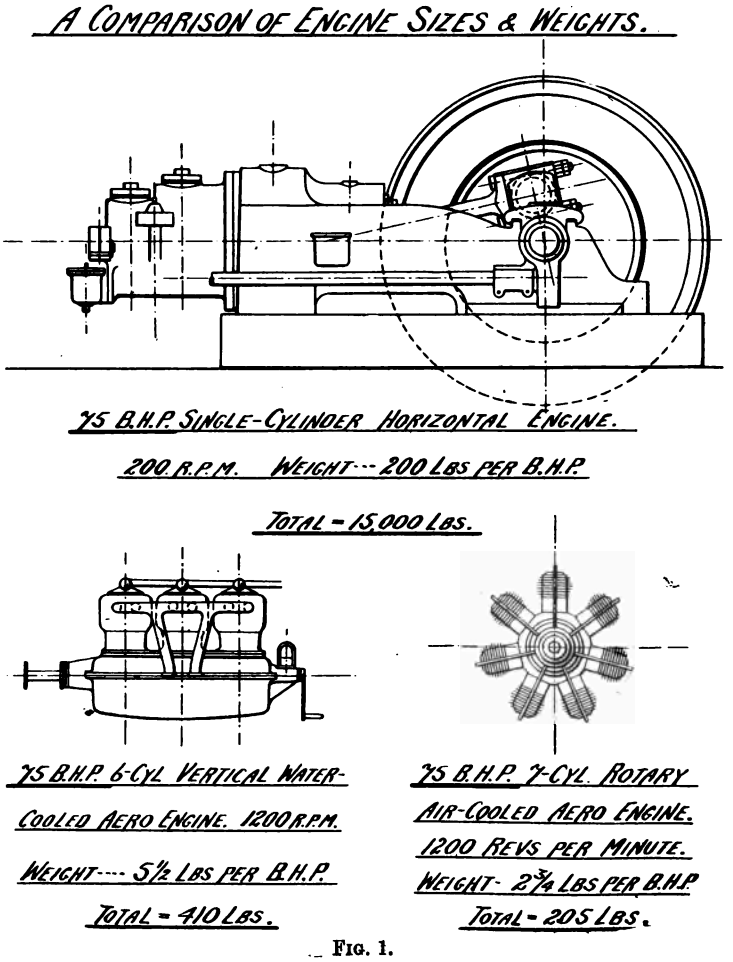

FIG. 1.

The striking contrast between the size and weight of aero engines and those of equal-powered petrol engines of "stationary" type is clearly exhibited in fig. 1, which shows—to the same scale—outline views of three petrol-driven engines, each of 75 B.H.P. The uppermost of these illustrates a standard single-cylinder horizontal, single-acting, stationary engine, as so largely used in

land installations; this runs normally at about 200 r.p.m., and has a gross weight of roundly 15,000 lbs.

The lower left-hand illustration is of a typical six-cylinder water-cooled aero engine, also of 75 B.H.P. when running at its normal speed of 1200 r.p.m. The engine weight has now, however, undergone an enormous reduction, being but 410 lbs., or only about $\frac{1}{37}$th of that of the stationary engine.

The third illustration is also of a 75 B.H.P. aero engine, this time of the seven-cylindered rotary air-cooled type, running normally at 1200 r.p.m. Here the engine weight is reduced to only 205 lbs., *i.e.* about $\frac{1}{73}$rd of that of the equal-powered stationary engine.

It must be remembered, however, that the massive, slow-running single-cylindered horizontal engine will work quietly and steadily at full power for years with a very small amount of attention, whereas the exceedingly light high-speed aero engines require at present comparatively frequent dismantling and renewals of worn parts and a considerable amount of careful skilled attention to keep them in satisfactory running condition.

It is well understood by engineers that in similar engines the weight per B.H.P. increases with the size; to meet the demand for high-powered internal-combustion engines, in recent years designers have accordingly produced multi-cylindered engines, usually of the tandem vertical type, with considerable saving in weight, although the single-cylinder, single-acting horizontal design is still largely used for outputs of up to about 150 B.H.P. for stationary work.

Aero engine designers have often achieved great weight reduction by using a large number of cylinders, and designs embodying eighteen and twenty cylinders are referred to later in this volume; the resulting complexity, and exceedingly large number of separate parts, involve a great amount of time and cost in dismantling and reassembling, which is a very serious disadvantage. Constructors in increasing numbers are now producing six-cylindered vertical aero engines, and also eight-cylindered diagonal or "Vee" designs—both water-cooled,—these running for longer periods without requiring to be dismantled, though in each type the weight per B.H.P. materially exceeds that of the multi-cylindered air-cooled rotary design.

The statement below gives the average weight per B.H.P. of several standard types of single-acting four-stroke internal-com-

bustion engine for sizes up to about 200 B.H.P.; the figures given include the weight of flywheels (where fitted), and also such immediate adjuncts as magnetos, carburettors, and oil and water pumps, but do not include the weight of the radiator or of the water, oil, and petrol used by the engine when running.

AVERAGE WEIGHTS IN LBS. PER B.H.P.

TYPE.	Lbs. per B.H.P.
Stationary 1-cylinder Diesel engines . . .	600
„ 2-cylinder „ „	500
„ 3-cylinder „ „	350
Marine Diesel engines	200–300
Horizontal 1-cylinder oil (kerosene) engines .	300
„ „ stationary coal-gas engines	150–200
Specially light high-speed Diesels for submarines	60
4-cylinder petrol or kerosene engines for motor boats	50–80
4-cylinder petrol engines of motor cars . .	16–25
"Aero" petrol engines, 4–20 cylinders . .	2½–6

The petrol engine is essentially a hot-air engine, the function of the small proportion of petrol vapour (only some 2 per cent.) with which the air is "carburetted" being to cause an almost instantaneous and very intense heating of the "charge" when exploded or "fired" by the ignition apparatus.

The combustion of the air-heating fuel thus occurs nearly instantaneously within the engine cylinder itself, whence the phrase "internal-combustion engine," in contradistinction to certain earlier types of hot-air engine wherein the working air was heated by an external furnace, and which may hence with propriety be termed "external-combustion engines."

These early external-combustion hot-air engines were theoretically of much higher thermal efficiency than the four-stroke cycle engines now so universally and successfully employed; it is of interest, therefore, to examine briefly their cycles of operation in order to understand how it has happened that the cycle of maximum thermal efficiency involves exceedingly bulky and heavy engines, and is entirely unsuitable to the practical requirements of power users.

The reader is here reminded that the fundamental relation

always connecting the pressure, volume, and temperature of a perfect gas is:

$$Pv = cT, \quad . \quad . \quad . \quad . \quad . \quad (1)$$

where P = Absolute pressure in lbs. per square foot.
v = The volume of 1 lb. of the gas, in cubic feet.
c = A constant for any, the same, gas.
T = The absolute temperature of the gas in ° F.
„ = Ordinary temperature in ° F. + 460.

For our purpose here, Air may be taken to be a perfect gas. At atmospheric pressure of 14·7 lbs. per square inch, and at a temperature of 32° F., it is found by experiment that 12·387 cubic feet of air weigh 1 lb.; hence putting, in Eq. (1), $14{\cdot}7 \times 144$ for P, 12·387 for v, and $(460+32)$ for T, we have:

$$14{\cdot}7 \times 144 \times 12{\cdot}387 = c \times 492;$$

whence, for air, the constant c has the value 53·29.

Thus the characteristic equation for dry air is:

$$Pv = 53{\cdot}29T. \quad . \quad . \quad . \quad . \quad . \quad (2)$$

Observe from Eq. (1) that if the temperature of an enclosed mass of gas be increased without change of volume, the resulting increase of pressure is proportional to the increase of *absolute* temperature; that is, $P \propto T$ when v is constant.

The British thermal unit (B.Th.U.) is the quantity of heat necessary to raise 1 lb. of water from 39° F. to 40° F., and its mechanical equivalent, J, is 778 foot-lbs. of work.

Let k_v denote the quantity of heat necessary to raise 1 lb. of air at constant volume through 1° F.; then k_v is termed the specific heat at constant volume, and at ordinary temperatures has the value 0·1689 B.Th.U. for air. If k_v be assumed as constant in value, then the heat, H_v, required to raise 1 lb. of air at constant volume from temperature T_0 to temperature T is given by:

$$H_v = k_v(T - T_0) \quad \text{B.Th.U.} \quad . \quad . \quad . \quad (3)$$

Again, it is evident from Eq. (1) that if the temperature of a mass of gas be increased without change of pressure, then the increase of volume is proportional to the increase of *absolute* temperature; or, briefly, $v \propto T$ when P is constant.

The quantity of heat necessary to raise 1 lb. of air at constant pressure through 1° F., *i.e.* the specific heat at constant pressure,

is denoted by k_p, and for air this has the value at ordinary temperatures of 0·2374 B.Th.U.; thus the heat, H_P, required to raise 1 lb. of air at constant pressure from temperature T_0 to temperature T is given by:

$$H_P = k_p(T - T_0) \quad \text{B.Th.U.} \qquad . \quad . \quad . \quad (4)$$

The value of k_p exceeds that of k_v by the heat equivalent of the external work done by a gas when heated at constant pressure; for air this external work amounts to

$$\{0{\cdot}2374 - 0{\cdot}1689\} \times 778 = 53{\cdot}29 \quad \text{foot-lbs. per lb.};$$

it will be noted from Eq. (2) that this is the value of the constant, c, for air. Thus it is clear that $c = J(k_p - k_v)$ foot-lbs. per lb. ° F.

Usually in the working of heat engines, owing to the variation in the rate of supply of heat, both P and v vary simultaneously. In general, an equation of the form:

$$Pv^n = \text{a constant} \qquad . \quad . \quad . \quad . \quad (5)$$

is in practice found to be competent to represent the relation between the changes of P and v, n being a constant index. The

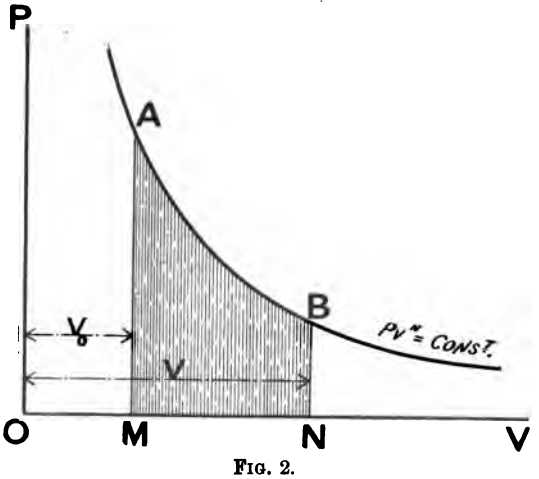

FIG. 2.

curves corresponding to this equation are all of the general form indicated in fig. 2; if the working air be initially at volume $v_0 = OM$ and pressure $P_0 = MA$ (so that the "constant" in Eq. (5) has the value $P_0 v_0^n$), and finally at volume $v = ON$ and pressure

$P = NB$, then the external work, W, done by the air in expanding from OM to ON is:

$$W = \text{Area AMNB} = \int_{v_0}^{v} P dv.$$

As, from Eq. (5), $P = \frac{P_0 v_0^n}{v^n}$, this becomes:

$$W = P_0 v_0^n \int_{v_0}^{v} \frac{dv}{v^n},$$

and this is easily found to have the value:

$$W = \frac{P_0 v_0 - Pv}{n-1} \text{ foot-lbs. per lb.} \quad . \quad . \quad . \quad (6)$$

But, as air is sensibly a perfect gas, we have by Eq. (1), $P_0 v_0 = cT_0$ and $Pv = cT$; hence from Eq. (6) we get:

$$W = \frac{c}{n-1}(T_0 - T) \text{ foot-lbs. per lb.,} \quad . \quad . \quad (7)$$

which shows that in expansion according to the Pv^n law the external work done is proportional to the change of temperature of the working air.

The heat, H, that must be given to the working air in order that it may expand in accordance with the Pv^n law is equal to the (algebraic) sum of the heat equivalent of the external work done and that of the change of internal energy of the air; that is:

$$H = \frac{c}{J(n-1)}(T_0 - T) + k_v(T - T_0). \quad . \quad . \quad . \quad (8)$$

As $c = J(k_p - k_v)$, we have on substitution in this result, and reduction:

$$H = \frac{nk_v - k_p}{n-1}(T - T_0) \text{ B.Th.U. per lb.} \quad . \quad . \quad (9)$$

This shows that the heat to be expended on the air is also proportional to the change of temperature, and further, that the air expands with an apparent specific heat which is constant, and equal to $\frac{nk_v - k_p}{n-1}$ B.Th.U. per lb.

The two modes of expansion of fundamental importance in heat engine theory are: (1) Isothermal expansion; (2) Adiabatic expansion.

(1) In isothermal expansion the temperature of the air remains constant throughout.

As $Pv = cT$ always, this implies that the value of the product Pv remains constant in isothermal expansion, *i.e.* the isothermal equation for a perfect gas is:

$$Pv = P_0 v_0 . \quad . \quad . \quad . \quad . \quad . \quad (10)$$

Hence the external work done in expanding from volume v_0 to volume v is:

$$W = P_0 v_0 \int_{v_0}^{v} \frac{dv}{v} = P_0 v_0 \log_\epsilon \frac{v}{v_0} \quad \text{foot-lbs. per lb.} \quad . \quad (11)$$

The ratio $\frac{v}{v_0}$ is the ratio of isothermal expansion, and is conveniently denoted by ρ; thus, in this case:

$$W = P_0 v_0 \log_\epsilon \rho \quad \text{foot-lbs. per lb.} \quad . \quad . \quad (12)$$

$$\text{,,} = cT_0 \log_\epsilon \rho \quad \text{,,} \quad \text{,,} \quad . \quad . \quad (13)$$

As the internal energy of a perfect gas depends only on its temperature, it follows that in isothermal change the internal energy of the air remains constant. Hence in isothermal expansion the heat given to the air is the exact equivalent of the external work done by the air; and conversely, in isothermal compression, the heat that flows from the air during compression is the exact equivalent of the work done on the air in compressing it.

Isothermal expansion corresponds to $n = 1$ in Eq. (5); but we have to integrate this case specially, as, on putting $n = 1$ in Eqs. (6), (7), (8), and (9), these all assume the indeterminate form $\frac{0}{0}$.

(2) Adiabatic expansion is the name given to that kind of expansion when the working air is totally cut off from any heat communication with external bodies. The equation is very readily obtained from Eq. (9); for as no heat can pass into or away from the air, we must put $H = 0$ in Eq. (9), and thence deduce the corresponding value of n. Now, if $H = 0$, we must have:

$$\frac{nk_v - k_p}{n-1}(T - T_0) = 0 .$$

Hence $\frac{nk_v - k_p}{n-1}$ must be zero; that is, n must have the value $\frac{k_p}{k_v}$.

The ratio $\frac{k_p}{k_v}$ is of constant occurrence in heat theory, and is usually denoted by γ; thus:

$$\gamma = \frac{k_p}{k_v}, \quad . \quad . \quad . \quad . \quad . \quad (14)$$

and thus the adiabatic equation for a perfect gas is:

$$Pv^\gamma = \text{a constant} = P_0 v_0^\gamma, \quad . \quad . \quad . \quad (15)$$

P_0, v_0 being the initial pressure and volume respectively.

In adiabatic expansion the external work is done at the expense of the internal energy of the expanding air; its temperature and pressure consequently fall very rapidly as the expansion proceeds; the relation between temperature and volume is easily found. For Eq. (15) may be written:

$$Pv \times v^{\gamma-1} = P_0 v_0 \times v_0^{\gamma-1},$$

i.e.

$$cT \times v^{\gamma-1} = cT_0 \times v_0^{\gamma-1};$$

hence:

$$\frac{T}{T_0} = \left(\frac{v_0}{v}\right)^{\gamma-1} = \left(\frac{1}{\rho}\right)^{\gamma-1}. \quad . \quad . \quad . \quad (16)$$

Similarly, the relation between temperature and pressure is easily found to be:

$$\frac{T}{T_0} = \left(\frac{P}{P_0}\right)^{\frac{\gamma-1}{\gamma}}. \quad . \quad . \quad . \quad . \quad (17)$$

For air, the value of γ is $\frac{0{\cdot}2374}{0{\cdot}1689} = 1{\cdot}4056$; it is usually sufficient to take 1·4 as the value.

The Perfect Heat Engine.—In 1824 Sadi Carnot first described a heat engine of maximum possible thermal efficiency. The working substance or "vehicle of heat" may be *any* substance which is affected by heat, but we here consider air, regarded as a perfect gas, as the working substance, since the engines later referred to herein are essentially air engines. Carnot's imaginary engine, illustrated diagrammatically in fig. 3, may be regarded as comprising the usual cylinder, piston, connecting-rod, crankshaft, and flywheel, together with a reservoir of heat (as, *e.g.*, a furnace), which is always at a high (abs.) temperature T_3, and a second reservoir (as, *e.g.*, a condenser) always at the low (abs.) temperature T_1. The piston and cylinder barrel are supposed to be absolute

non-conductors of heat, while the cylinder bottom is conceived as an absolute conductor, but with no capacity for heat.

Suppose the engine to be started by pulling round the fly-wheel; the order of operations is then as follows:—

1. Let the piston be in the "out" position 1, and suppose the cylinder to then contain 1 lb. of air at pressure P_1 (=A1), volume v_1=OA, and (abs.) temperature T_1° F.

2. The crankshaft continuing its rotation, the piston moves

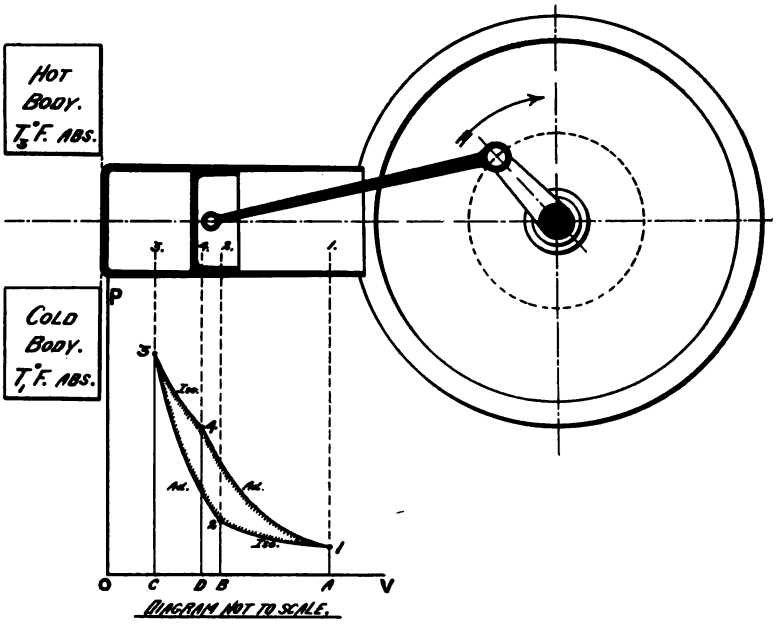

FIG. 3.—Diagram of Carnot air engine.

inwards towards the left, compressing the air as indicated by the curve 1–2; during this first portion of the compression stroke, Carnot supposed the cold reservoir to be in contact with the cylinder bottom, so that the temperature of the air remained constantly at T_1 during the stage 1–2. Thus 1–2 is an isotherm; the work done *on* the air by the crank is represented by the area A12B, which by Eq. (11) is expressed by $P_1 v_1 \log_e \left(\frac{v_1}{v_2}\right)$, or, by aid of Eq. (1), by $cT_1 \log_e \left(\frac{v_1}{v_2}\right)$ foot-lbs. This expression also measures the quantity of heat that flows from the air into the cold body.

3. At the point 2, determined in a manner to be presently shown, the cold body is suddenly removed, so that the remaining portion, 2–3, of the in-stroke is performed with the air cut off from any heat communication from without. The compression period 2–3 is thus adiabatic, and the pressure and temperature rapidly rise, as indicated by the curve 2–3.

The point 2 is so chosen that just as the piston reaches its extreme "in" position, 3, the temperature of the air has risen to T_3, the temperature of the hot body.

During this compression period 2–3, no heat has been received or rejected by the air; the work done by the crank *on* the air is represented by the area B23C, and this by Eq. (7) is expressed by $\frac{c}{\gamma-1}(T_3-T_1)$ foot-lbs., which measures also the addition to the internal energy of the air.

4. The piston now commences its out-stroke, and the hot body is instantly applied to the cylinder bottom, so that during the first period, 3–4, of this stroke the expanding air is maintained at the constant temperature T_3. Thus, 3–4 is an isotherm, and the work done *by* the air on the crank is represented by the area C34D, which (Eq. 11) is $P_3v_3 \log_e\left(\frac{v_4}{v_3}\right)$ foot-lbs., or, as $P_3v_3=cT_3$ (Eq. 1), by $cT_3 \log_e\left(\frac{v_4}{v_3}\right)$ foot-lbs., and this also measures the heat received by the air from the hot body during this period.

5. At a point 4, determined as shown below, the hot body is suddenly removed, and the remaining portion, 4–1, of the out-stroke is performed by the air cut off from any heat communication from without. The expansion period 4–1 is thus adiabatic, and the pressure and temperature rapidly fall as the expansion proceeds. The point 4 is so chosen that, just as the piston reaches its extreme "out" position, the temperature of the working air has fallen to T_1, *i.e.* to the temperature of the cold body.

The work done *by* the expanding air on the crank during 4–1 is represented by the area D41A, and this, by Eq. (7), is expressed by $\frac{c}{\gamma-1}(T_3-T_1)$ foot-lbs., and is derived from the internal energy of the working air, which is accordingly diminished by this amount; it will be observed that this is exactly equal to the increase in the internal energy of the air during the period 2–3.

Having returned to the point 1, we have now the 1 lb. of working air in exactly the same state, as to pressure, volume, and temperature, as at the commencement of the series of operations; the same cycle is now repeated continuously so long as the engine is running.

In one complete cycle of operations—which occurs once during each revolution of the crankshaft in the single-cylinder single-acting engine here contemplated—the work done *by* the air on the crank is represented by the area C341AC, while the work done *on* the air by the crank is represented by A123CA; the difference, viz. the enclosed area 1234, represents the excess work done per cycle *by* the air on the crank, *i.e.* the useful work, U, of the engine per revolution.

The points 2 and 4 on the diagrams are determined as follows:—1–2 and 3–4 being isotherms, and 2–3 and 4–1 adiabatics, we have:

$$P_1v_1 = P_2v_2, \quad P_3v_3 = P_4v_4, \quad P_2v_2^{\gamma} = P_3v_3^{\gamma}, \quad \text{and} \quad P_4v_4^{\gamma} = P_1v_1^{\gamma}.$$

Multiplying these four equations all together gives:

$$v_1v_2^{\gamma}v_3v_4^{\gamma} = v_2v_3^{\gamma}v_4v_1^{\gamma}, \quad i.e. \quad v_1v_3 = v_2v_4;$$

from which we at once have:

$$\frac{v_1}{v_2} = \frac{v_4}{v_3},$$

or the isothermal expansion ratios are equal; and also:

$$\frac{v_2}{v_3} = \frac{v_1}{v_4},$$

i.e. the adiabatic ratios are also equal.

Denote the isothermal ratios by ρ, and the adiabatics by r, and let the total expansion ratio be X. Then

$$X = \frac{v_1}{v_3} = \frac{v_1}{v_2}\frac{v_2}{v_3},$$

i.e.

$$X = \rho r \quad . \quad . \quad . \quad . \quad . \quad . \quad (18)$$

In working out a concrete example, we may assume P_1, v_1, T_1, v_3, and T_3 as data; *i.e.* we have given the initial condition, the temperature limits, and the total expansion range. The corresponding adiabatic expansion ratio is then found thus:

$$P_2v_2^{\gamma} = P_3v_3^{\gamma},$$

so that

$$P_2v_2 \times v_2^{\gamma-1} = P_3v_3 \times v_3^{\gamma-1},$$

i.e.

$$cT_1 \times v_2^{\gamma-1} = cT_3 \times v_3^{\gamma-1},$$

i.e.

$$r = \frac{v_2}{v_3} = \left(\frac{T_3}{T_1}\right)^{\frac{1}{\gamma-1}}, \quad . \quad . \quad . \quad . \quad (19)$$

so that the adiabatic expansion ratio depends only upon the temperature limits.

To determine the isothermal expansion ratio, ρ, we have, from Eq. (18), $\rho = \frac{X}{r}$, whence by Eq. (19):

$$\rho = X\left(\frac{T_1}{T_3}\right)^{\frac{1}{\gamma-1}}; \quad . \quad . \quad . \quad . \quad (20)$$

thus the isothermal ratio depends upon the temperature limits and the total expansion ratio jointly; as ρ must be greater than 1, it follows that X must always be taken greater than $\left(\frac{T_3}{T_1}\right)^{\frac{1}{\gamma-1}}$.

Consider next the thermal efficiency of the engine. Thermal efficiency is the ratio of the useful work done to the heat supplied; so that in this case:

$$\text{Thermal efficiency} = \frac{U}{cT_3 \log_\epsilon \rho}.$$

But the useful work done is the difference between the heat supplied to and rejected by the working air during the isothermal periods 3–4 and 1–2 respectively, since no heat is received or rejected during 2–3 and 4–1, and also the changes of internal energy during these periods exactly cancel one another. Thus we have:

$$U = cT_3 \log_\epsilon \rho - cT_1 \log_\epsilon \rho, \quad . \quad . \quad . \quad (21)$$

whence the fundamentally important result that for the Carnot cycle of operations the

$$\text{Thermal efficiency} = \frac{cT_3 \log_\epsilon \rho - cT_1 \log_\epsilon \rho}{cT_3 \log_\epsilon \rho} = \frac{T_3 - T_1}{T_3},$$

i.e.

$$\text{Thermal efficiency} = 1 - \frac{T_1}{T_3}. \quad . \quad . \quad . \quad (22)$$

The thermal efficiency is thus always less than unity, but increases as the ratio $\frac{T_1}{T_3}$ diminishes; $\frac{T_1}{T_3}$ is diminished by making the cold body as cold as possible, and the hot body as hot as possible.

The expression (22) is the maximum possible thermal efficiency of *any* heat engine working between the temperature limits T_1 and T_3, no matter what "vehicle of heat" be employed; for its realisation, Carnot pointed out that the cycle of operations must fulfil the following conditions:—

1. All the heat must be received by the working substance at the higher temperature T_3.

2. All the rejected heat must be rejected at the lower temperature T_1.

3. The cycle must be reversible.

An engine satisfying these conditions is termed an elementary

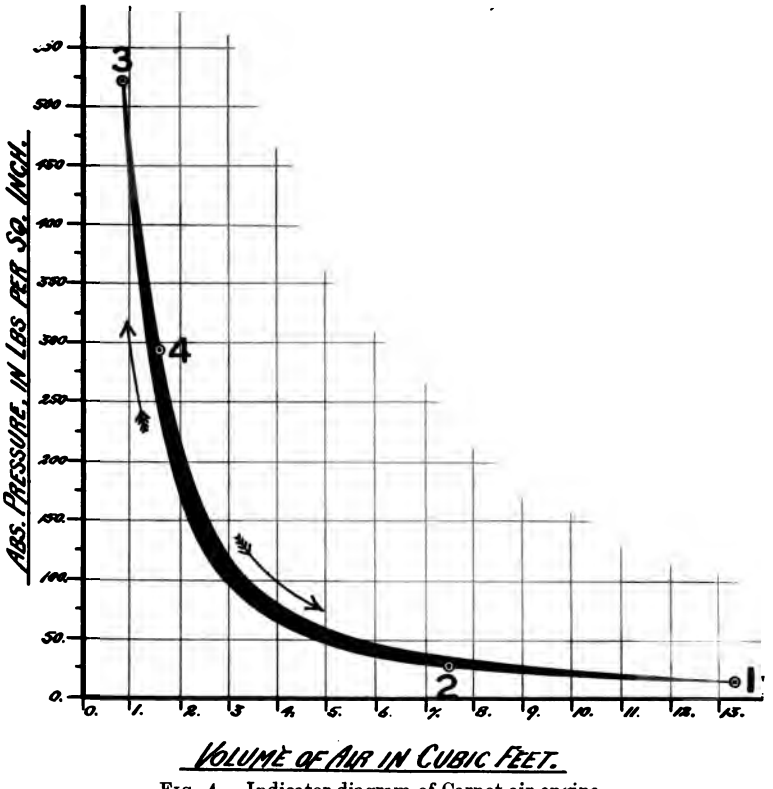

FIG. 4.—Indicator diagram of Carnot air engine.

heat engine, and cannot conceivably be exceeded in thermal efficiency by any other engine whatever, working between the same temperature limits. It is the ideally perfect heat engine of complete thermal efficiency.

It unfortunately happens, however, that this excellent cycle cannot be actually realised, on account of certain insuperable practical difficulties. In order that these difficulties may be appreciated fig. 4 has been drawn, showing, to scale, the indicator diagram of a Carnot air engine using 1 lb. of air initially at atmospheric

pressure (14·7 lbs. per square inch) and 70° F.; the total expansion is taken at the large value 15, and the upper limit of temperature as 800° F.

The process of calculation may be arranged as follows:—

We are given $T_1 = 70+460 = 530$, $T_3 = 800+460 = 1260$, $P_1 = 14{\cdot}7 \times 144 = 2116{\cdot}8$ lbs. per square foot, and $X = 15$.

In Eq. (2), put $P = 2116{\cdot}8$ and $T = 530$; then we have $v_1 = 13{\cdot}3$ cubic feet. And as $v_3 = \frac{v_1}{X}$, we have $v_3 = 0{\cdot}89$ cubic feet.

Next, by Eq. (20) the isothermal ratio is:

$$\rho = 15 \times \left(\frac{530}{1260}\right)^{2\cdot5} = 1{\cdot}72.$$

Hence $\quad v_2 = \frac{v_1}{\rho} = \frac{13{\cdot}3}{1{\cdot}72} = 7{\cdot}75$ cubic feet,

and $\quad v_4 = \rho \times v_3 = 1{\cdot}72 \times 0{\cdot}89 = 1{\cdot}53$ cubic feet.

As to the pressures, we have $P_1 = 2116{\cdot}8$ lbs. per square foot $= 14{\cdot}7$ lbs. per square inch. Also, by Eq. (2), $P_3 \times 0{\cdot}89 = 53{\cdot}29 \times 1260$, whence $P_3 = 75{,}444$ lbs. per square foot $= 524$ lbs. per square inch.

Then $\quad P_4 = \frac{P_3}{\rho} = \frac{524}{1{\cdot}72} = 304{\cdot}6$ lbs. per square inch,

and $\quad P_2 = \rho P_1 = 1{\cdot}72 \times 14{\cdot}7 = 25{\cdot}3$ lbs. per square inch.

Denote by p the mean effective pressure during the working stroke, in lbs. per square inch; then p is the average vertical height of the enclosed area 1234, and is evidently determined from the relation $144p(v_1 - v_3) = U = c(T_3 - T_1) \log_e \rho$ (Eq. 21).

Thus: $$p = \frac{c}{144} \frac{T_3 - T_1}{v_1 - v_3} \log_e \rho \text{ lbs. per square inch.} \qquad (22a)$$

So that in this case $p = \frac{53{\cdot}29 \times 730 \times {\cdot}542}{144 \times 12{\cdot}44} = 11{\cdot}56$ lbs. per square inch.

Lastly, the thermal efficiency, by Eq. (22), has the value $1 - \frac{530}{1260} = 0{\cdot}58$; that is to say, with the temperature limits as taken, this ideal heat engine of maximum theoretical efficiency can convert 58 per cent. of the heat given to it into useful work.

Consider next the probable weight and size of such an air engine:—It must be sufficiently strongly constructed throughout to withstand safely the very high compression pressure of 524 lbs.

per square inch, which is about the same as the maximum working pressure of the modern Diesel heavy-oil engine; and single-cylinder, single-acting Diesel land engines commonly weigh about 600 lbs. per B.H.P.

But although the engine must be designed for a cylinder pressure of over 500 lbs. per square inch, the mean effective pressure, upon which alone the horse-power depends, is only 11½ lbs. per square inch, *i.e.* only about one forty-fifth part of the maximum; evidently, then, the engine must be very heavy for its power.

Also, it is easily found that with a cylinder 30 inches in diameter the stroke of the engine must be, roundly, 30½ inches in order that the piston displacement per stroke $(=(v_1-v_3))$ may be 12·44 cubic feet.

Modern Diesel engines are run at a piston speed of about 600 feet per minute, which, for the imaginary engine here contemplated, would correspond to 118 revolutions per minute; but so great a speed as this is not available, on account of the insuperable practical difficulties encountered in the attempt rapidly to heat and cool a comparatively large volume of air, and external-combustion hot-air engines were actually run at only from about 100 to 200 feet per minute piston speed. Thus we cannot safely assume a revolution speed of more than 40 per minute for this case.

The indicated horse-power at full efficiency would accordingly be:

$$\text{I.H.P.} = 0{\cdot}7854 \times 30^2 \times 11{\cdot}56 \times \frac{30{\cdot}5}{12} \times 40 \times \frac{1}{33{,}000}$$
$$\text{,,} \quad = 25{\cdot}1\,,$$

in the ideally perfect case of no waste of heat.

Practically, however, there is considerable waste of heat, and also the cycle cannot be carried out perfectly, with the result that the thermal efficiency actually realised is only, at best, about one-fifth of that indicated by theory, so that the I.H.P. obtained would be only about 5. The great bulk of these engines also results in a low mechanical efficiency; in the most favourable circumstances, taking 0·6 as the value of the mechanical efficiency gives us $5 \times 0{\cdot}6 = 3$ as the B.H.P. of the engine.

Lastly, a $30'' \times 30\frac{1}{2}''$ single-cylindered, single-acting engine to withstand a compression pressure of 524 lbs. per square inch would, from analogy with the modern Diesel land engine, weigh fully 50 tons. Thus our Carnot air engine would weigh about 17 tons per B.H.P.

The utter impracticability of this type of engine is thus manifest. By modifications of cycle—as described in the regular treatises on heat engines[1]—the difficulties of excessive bulk and weight in proportion to power were somewhat reduced, but it was ultimately found impossible to make a practical success of this type of engine, in spite of the allurement of its perfect theoretical efficiency.

In illustration of the length to which constructors went, and to furnish a contrast with modern practice in quick-speed internal-combustion engines, it will suffice to mention that the external combustion hot-air engines used in propelling the ship *Ericsson* about 1852, comprised four single-acting working cylinders each *fourteen feet* in diameter; the stroke was six feet, and nine revolutions were made per minute. The I.H.P. of this immense engine was only 300, the mean effective pressure having the extremely low value of but 2·1 lbs. per square inch.

Thus, in general, the external-combustion engine involves high compression and low mean effective pressures, low revolution speed, and considerable heat losses. The bulk and weight are consequently enormous in relation to the useful power output. The type is now quite abandoned, except in a few special directions where very small power is required, as, *e.g.*, for domestic and similar purposes.

We proceed next to the internal-combustion or "explosion" engine, wherein the working air is very suddenly and very intensely heated by causing chemical combustion to flash through its volume, which is achieved by mixing with it a small quantity of some hydrocarbon vapour, so forming an explosive mixture, and igniting this by suitable means at the proper moment.

The history of the explosion engine begins with Huyghens' proposal, about 1680,[2] to utilise gunpowder as a motive agent, and culminates—after many different suggestions and tests—in the invention by Beau de Rochas in 1862 of the sequence of operations now almost universally employed, which is known indifferently as the De Rochas, Otto, or "four-stroke" cycle, and comprises suction, compression, expansion (or "working"), and exhaust strokes, all performed within the power cylinder.

[1] *E.g.* Rankine's *Steam Engine* (London: C. Griffin & Co., Ltd.).

[2] For a brief account of the history, see D. Clerk's *Gas, Petrol, and Oil Engine*, vol. i. (Longmans, Green & Co.).

Though this cycle—as will shortly be seen—is necessarily of much lower theoretical efficiency than the Carnot, it yet possesses the overwhelming practical advantages of being easily carried out in a small, light, and fast-running engine, and has thus brilliantly succeeded while the cycle of perfect efficiency has proved unattainable through, so far, insuperable practical difficulties. Fourteen years later, viz. in 1876, Dr Otto produced the world-famous four-stroke "Otto silent gas engine," which finally established the internal-combustion engine upon a commercial basis as an economical and reliable prime mover.

Fig. 5 shows diagrammatically the essentials of a simple form of modern single-acting, four-stroke, quick-speed, water-cooled internal-combustion engine of the type now so largely used in motor cars, motor boats, and aeroplanes. The light piston P, usually of cast-iron, but sometimes of steel, slides easily within the cast-iron (or, occasionally, steel) cylinder, and is kept gas-tight by three cast-iron spring rings placed in the grooves as indicated; the piston is connected to the crankshaft K by the light stamped steel connecting-rod R. The upper portion of the cylinder is water-cooled in order to prevent overheating by the successive explosions when running; cooling of the cylinder of course reduces the thermal efficiency, but is a practical necessity with the available materials of construction.

The crank-chamber is completely enclosed, but is often fitted with a covered inspection hole D giving access to its interior; the bottom, or "sump," contains a quantity of oil, into which the "big end" of the connecting-rod dips, thus splashing it about and so ensuring the lubrication of the working parts; a screwed plug in the bottom of the sump enables the used and impoverished oil to be periodically drained off, after which the crank-chamber is washed out with paraffin, and a charge of fresh oil introduced.

There are two valves, termed respectively the inlet and exhaust, placed sometimes on opposite sides of the cylinder (known as the T-arrangement)—in which case two camshafts are necessary,—but more often in a pocket on the same side (known as the L-arrangement), when one camshaft suffices for both. In fig. 5 the L-arrangement is illustrated, and the inlet valve is shown, the exhaust being a similar valve immediately behind it, and thus not appearing in the section. The inlet valve V is of the "poppet" or "mushroom" type, and is of mild or nickel steel; it is normally kept down on its

seat by a stiff helical spring H, and is lifted by a cam C fixed on the camshaft, which operates through a roller-ended tappet-rod T.

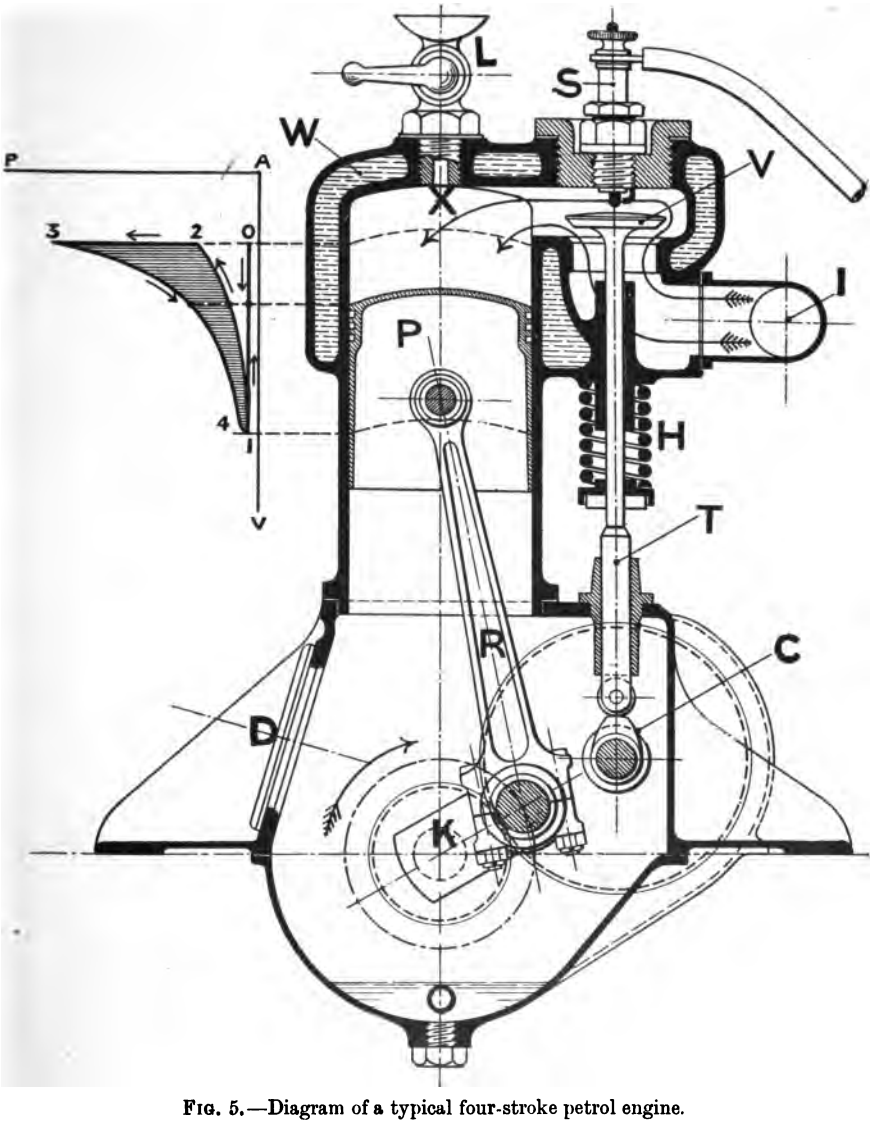

FIG. 5.—Diagram of a typical four-stroke petrol engine.

As the inlet and exhaust valves only require to be opened once in every two revolutions of the crankshaft, the camshaft is driven therefrom, by silent chain or cut steel gear wheels, at

one-half the crankshaft speed, whence it is also often termed the "half-speed" shaft.

In the inlet valve cap is screwed the sparking plug, S, by which the mixture of air and petrol vapour is exploded at the proper instant. L is a cock, or tap, communicating with the "combustion chamber" or upper portion of the cylinder, and may be used to relieve the compression in starting, to "prime" the chamber with a few drops of petrol, to inject paraffin if required to ease the piston after long standing, and permits also of the insertion of a wire or thin rod to determine when the piston is at the top of its stroke, when adjusting the timing or ignition.

The action of the engine is as follows :—The inlet valve V being raised by the cam, the piston on its first down-stroke draws into the cylinder a charge of carburetted air by way of the inlet pipe I; at, or very shortly after, the end of this down-stroke the inlet valve closes, and the piston on the return up-stroke compresses the explosive charge into the combustion chamber X; on the completion of the compression up-stroke the igniting apparatus causes a spark to leap across the gap between the sparking-plug electrodes within the cylinder, whereby the compressed mixture is instantly exploded, its temperature, and consequently also its pressure, suddenly undergoing a great rise.

The piston is next forcibly driven downwards by the inflamed mixture, thus performing the "working" or "expansion" stroke. When this stroke is nearly completed the exhaust valve is raised by its cam and the expanded gases at once escape into the atmosphere, the discharge being completed as far as possible during the subsequent up-stroke of the piston. The inlet valve is then again raised for the next down-stroke, and the cycle repeated as before. There are thus in each cycle four piston strokes, only one of which is a working stroke.

The changes of pressure and volume undergone by the working mixture during one complete four-stroke cycle are exhibited by the "indicator diagram" shown on the left on fig. 5, AV and AP being axes of volume and pressure respectively; AO represents the volume of the combustion chamber; during the suction down-stroke the line 01—at atmospheric pressure—is traced; next follows the compression up-stroke, when the changes of volume and pressure of the mixture are shown by the "compression curve" 1–2.

At 2 the charge is exploded, and the pressure instantly rises

from 2 to 3. Observe that at the top of its stroke the piston is momentarily at rest, and therefore, as the rise of pressure is extremely sudden, the mixture is practically ignited, or heated, at constant volume.

Next follows the working down-stroke, when the inflamed mixture expands as indicated by the curve 3–4, and finally, when at or near 4, the exhaust valve opens and the pressure at once falls to that of the atmosphere; the exhaust valve continues open during

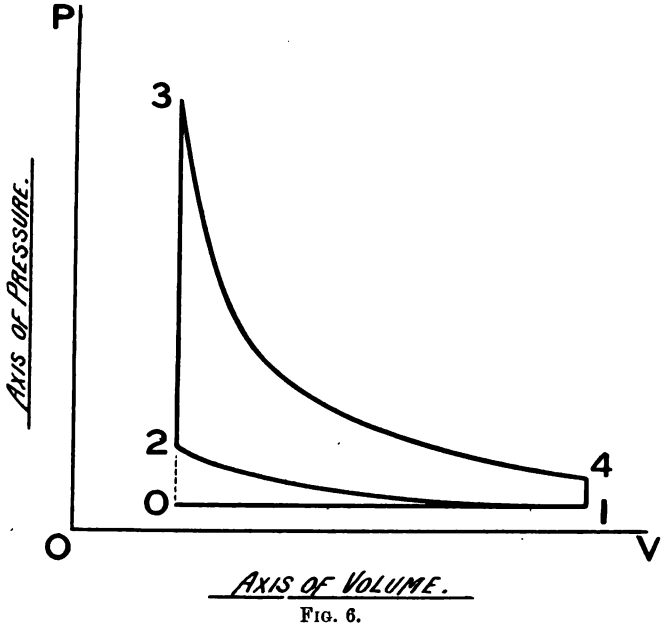

FIG. 6.

the second up-stroke, the corresponding line on the diagram being 1–0; the cycle is then repeated.

It is evident that the closed area 1234, measured in appropriate units, gives the useful work done by the engine in every *two* revolutions of the crankshaft.

The expression for the ideal thermal efficiency of the four-stroke cycle is obtained by aid of the simplifying assumptions that the curves 1–2 and 3–4 (fig. 6) are adiabatic, and that the specific heats of the working gases remain in the constant ratio $\gamma = 1{\cdot}4$. Then all the heat received by the working gases is received at constant volume at the instant of explosion, and is expressed by:

$$\text{Heat received} = k_v(T_3 - T_2) \quad \text{B.Th.U. per lb. of gases,}$$

while all the rejected heat is rejected at constant volume v_1, and is expressed by:

$$\text{Heat rejected} = k_v(T_4 - T_1) \quad \text{B.Th.U. per lb. of gases.}$$

The useful work done per lb. of gases is the difference between these two heat quantities, and is hence given by:

$$\text{Useful work} = k_v(T_3 - T_2) - k_v(T_4 - T_1) \quad \text{B.Th.U. per lb.}$$

The thermal efficiency is the ratio borne by the useful work done to the heat expended in obtaining it, and is accordingly, for this cycle:

$$\text{Thermal efficiency} = \frac{k_v(T_3 - T_2) - k_v(T_4 - T_1)}{k_v(T_3 - T_2)},$$

i.e.

$$\text{Thermal efficiency} = 1 - \frac{T_4 - T_1}{T_3 - T_2}. \quad . \quad . \quad (23)$$

This result admits of a remarkable simplification; for as, by supposition, 1–2 and 3–4 are adiabatic, we have by Eq. (16):

$$\frac{T_4}{T_3} = \left(\frac{v_3}{v_4}\right)^{\gamma-1} = \left(\frac{v_2}{v_1}\right)^{\gamma-1} = \frac{T_1}{T_2},$$

since $v_3 = v_2$ and $v_4 = v_1$.

Hence $\frac{T_4}{T_1} = \frac{T_3}{T_2}$, and thus $\frac{T_4 - T_1}{T_3 - T_2} = \frac{T_1}{T_2}$; so that (23) becomes:

$$\text{Thermal efficiency} = 1 - \frac{T_1}{T_2} \quad . \quad . \quad . \quad (24)$$

and thus depends only upon the (absolute) temperatures at the beginning and end of the *compression*, and is independent of the explosion temperature. This result is of fundamental importance in the theory of the four-stroke cycle engine.

As $\frac{T_1}{T_2} = \left(\frac{v_2}{v_1}\right)^{\gamma-1}$, we have, denoting the compression ratio $\frac{v_2}{v_1}$ by $\frac{1}{r}$, the equivalent expression:

$$\text{Thermal efficiency} = 1 - \left(\frac{1}{r}\right)^{\gamma-1}. \quad . \quad . \quad (25)$$

In this form the temperatures T_2 and T_1 are unnecessary, and the ideal thermal efficiency can be estimated immediately from the compression ratio. The thermal efficiency, *other things being equal*, thus increases with the compression ratio.

It is usual to assume γ to be 1·4, as for air, so that finally we have as the formula for calculating the ideal thermal efficiency of a four-stroke cycle engine:

$$\text{Thermal efficiency} = 1 - \left(\frac{1}{r}\right)^{0\cdot4} \quad . \quad . \quad . \quad . \quad (26)$$

The value of the compression ratio varies in practice from about $3\frac{1}{2}$ to $5\frac{1}{4}$; below are given a few values of the thermal efficiency, from Eq. (26), corresponding to several values of r:

$r =$	3·5	3·75	4·0	4·25	4·5	4·75	5·0	5·25
Thermal efficiency =	0·394	0·411	0·426	0·439	0·452	0·464	0·475	0·485

It is, however, here necessary to enter a caveat. Though, from Eq. (26), increased thermal efficiency should accompany increased compression, it is often found with actual engines that increasing the compression results in little or no increase, and indeed the thermal efficiency may even show a *diminution* with increased compression. This is due to a source of loss of which the above theory takes no cognisance, namely, the large loss of heat to the walls of the combustion chamber and piston crown at and near the maximum explosion temperature. This loss is greater as the surface exposed is greater relatively to the volume of hot gases enclosed; when compression is increased by diminishing this volume, the ratio of surface to volume, and hence the heat loss, increases. This increase in any case must reduce any gain in thermal efficiency arising from the increased compression, and may even, as above remarked, more than nullify it. To realise the thermodynamic advantage of increased compression, this should be effected by increasing the stroke, leaving the combustion chamber unchanged in form and size.

Due to this cooling loss, there is for each type of actual engine a compression ratio of maximum practical thermal efficiency, which is determined by experience; for petrol engines of normal four-stroke type the value is probably of the order of about 4·5.

The limits of temperature in the four-stroke cycle are T_3 and T_1, and accordingly the thermal efficiency of a Carnot engine working between these limits would be $1 - \frac{T_1}{T_3}$ (Eq. 22), which is considerably greater than $1 - \frac{T_1}{T_2}$, the maximum possible to the four-stroke cycle. The four-stroke is theoretically an imperfect

cycle, inasmuch as the heat received is received not at constant but at rising temperature, while the heat rejected is rejected at falling temperature; it is nevertheless the best practical cycle of operations that has so far been discovered.

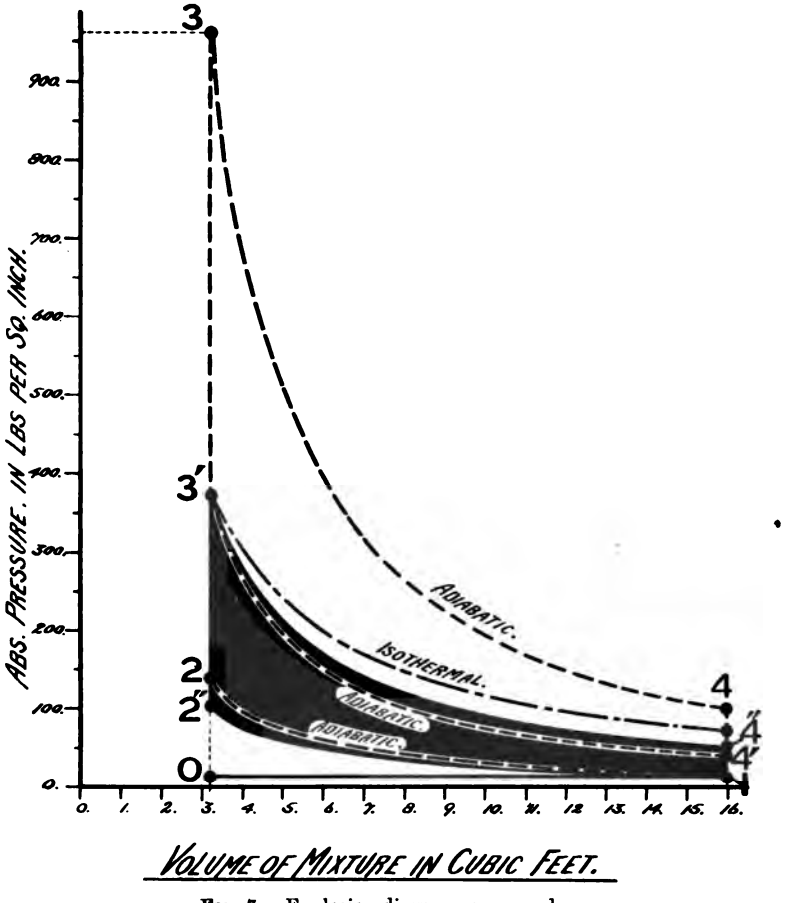

FIG. 7.—Explosion diagrams compared.

Consider next, in rather more detail, the case of an engine using 1 lb. of air-petrol mixture per cycle; let the air be initially at 70° F. and atmospheric pressure, and suppose the mixture to consist of $\frac{15}{16}$ths of a lb. of air and $\frac{1}{16}$th of a lb. of petrol vapour.

By Eq. (1), $\frac{15}{16}$ths of a lb. of air at 70° F. and atmospheric pressure occupies 12·5 cubic feet, while $\frac{1}{16}$th of a lb. of petrol

vapour occupies then, roundly, 0·25 cubic feet; hence the volume of fresh charge taken into the cylinder during the suction stroke will, in the ideal case, be $12{\cdot}5+0{\cdot}25=12{\cdot}75$ cubic feet. Assume the compression ratio, r, to be 5; then (fig. 6) $v_1=5v_2$ and $(v_1-v_2)=12{\cdot}75$, so that $v_2=\frac{12{\cdot}75}{4}=3{\cdot}19$ cubic feet is the volume of the combustion chamber, assumed to be filled with exhaust gases from the previous cycle, at 70° F. and atmospheric pressure; the weight of this is taken to be, roundly, 0·25 lb., so that on the whole we have to deal with a total initial volume, v_1, of $12{\cdot}75+3{\cdot}19=15{\cdot}94$ cubic feet of gases initially at 70° F. and atmospheric pressure, and having a mass of 1·25 lbs.

Experiments by Mr B. Blount in 1908, using a bomb calorimeter, showed the average calorific value per lb. of petrol to be slightly greater than 20,000 B.Th.U. We assume here the round figure of 20,000 B.Th.U. per lb.; thus the $\frac{1}{16}$th of a lb. of petrol on explosion will evolve $\frac{20{,}000}{16}=1250$ B.Th.U. of heat.

The case under consideration is exhibited in fig. 7; as before, 0–1 represents the suction stroke, 1–2 the compression, assumed adiabatic, 2–3 the rise of pressure on explosion, and 3–4 the adiabatic expansion.

We have $T_1=70+460=530°$ F. (abs.); hence, using Eq. (16), we get $T_2=1009°$ F. Also, as $p_1=14{\cdot}7$ lbs. per square inch, we obtain, from Eq. (17), $p_2=140$ lbs. per square inch.

Now make the assumptions: (1) that all the 1250 B.Th.U. are suddenly evolved by the mixture on explosion, and (2) that k_v remains constant at the value 0·1689 B.Th.U. per lb. throughout. Then the rise of temperature on explosion will be $\frac{1250}{0{\cdot}1689}\times\frac{4}{5}=5921°$ F. and accordingly the temperature at 3 will be:—

$$T_3=1009+5921=6930° \text{ F. (abs.)}.$$

The pressure at 3 will be to that at 2 as $T_3 : T_2$; hence:

$$p_3=\frac{6930}{1009}\times 140=962 \text{ lbs. per square inch (abs.)}.$$

Next, as $\frac{T_4}{T_1}=\frac{T_3}{T_2}$, we have $T_4=3640°$ F. (abs.).

The useful work done per lb. of working gases, expressed in heat units, is:

$$k_v(T_3 - T_2) - k_v(T_4 - T_1) = 475 \text{ B.Th.U.};$$

as we have here $1\frac{1}{4}$ lbs. of working gases, the

$$\text{Useful work} = \text{Area } 1234 = 475 \times 1{\cdot}25 = 594 \text{ B.Th.U.}$$

This is also, of course, immediately obtained by multiplying the 1250 B.Th.U. of heat received by the working gases, by the value of the thermal efficiency corresponding to $r = 5$ in Eq. (26), viz. 0·475; thus:

$$\text{Useful work} = 0{\cdot}475 \times 1250 = 594 \text{ B.Th.U.}$$

per complete cycle.

The mean effective pressure, p, is obtained from the relation:

$$144p(v_1 - v_2) = J \times U, \quad . \quad . \quad . \quad . \quad (27)$$

whence $p = 252$ lbs. per square inch.

Thus, with the simplifying assumptions made in this estimate, the maximum temperature attained appears as 6930° F. (abs.), or 6470° F. by ordinary scale, the corresponding maximum pressure being 962 lbs. per square inch, and the mean effective pressure 252 lbs. per square inch; in actual engines these very high temperatures and pressures are never approached.

One of the first observations made in systematic experiments on the explosion of gaseous mixtures was that the maximum temperature and pressure realised are, roughly, only about one-half as great as are indicated by calculations made in the above manner. This important discrepancy is mainly due to the following causes:—

1. **Dissociation at High Temperatures.**—Chemical combination is usually accompanied by the evolution of heat, but the compound itself may generally be decomposed by raising it to a higher temperature; when the first portions of a gaseous mixture combine, the heat evolved raises the whole mass to so high a temperature that further combination is checked until the temperature is reduced by loss of heat to the walls of the containing vessel, assisted also by that lost by conversion into work in the case of an engine. Thus it is clear that complete combustion does not occur instantaneously, but that the mixture continues to burn and evolve heat as the temperature falls until all the active gases are combined.

It is convenient to mention here the nomenclature adopted by Dr Dugald Clerk in connection with the phenomena of the explosion of gaseous mixtures:—

The time of explosion is the interval of time elapsing between the beginning of increase of pressure and the attainment of maximum pressure.

Explosion is considered to be complete when the maximum pressure is attained.

Complete inflammation is the spreading of the flame throughout the mass of the exploding gases; explosion experiments show that inflammation is complete when maximum pressure is attained.

Complete combustion is the complete combination, *i.e.* burning, of the exploding gases into carbon dioxide and steam. It is evident —from what has just been said of dissociation—that combustion is by no means complete at the same instant as the inflammation and explosion, but continues thereafter for a shorter or longer time, according as the gaseous mixture contains a small or large excess of air. In the case of the small quick-speed petrol engine, combustion probably continues throughout the working stroke, with the result that the actual expansion curve lies between the adiabatic and the isothermal drawn from the top of the diagram.

Temperature attained during Explosion.—(Abs.) temperature is considered to be always proportional to the value of the product pv; the initial condition being usually known, *i.e.* p_0, v_0, and T_0, the temperature, T, at (pv) is inferred from the relation:

$$\frac{T}{T_0} = \frac{pv}{p_0 v_0} \quad . \quad . \quad . \quad . \quad . \quad (28)$$

In the case of explosion experiments in closed vessels the volume is invariable, and the (abs.) temperatures are then taken as proportional to the pressures; in an engine cylinder, however, both p and v change simultaneously, and it is commonly found that the product pv attains its maximum value shortly after the commencement of the working stroke; this is the point of maximum temperature, which is determined by aid of Eq. (28).

1. Dissociation has already been referred to as an important factor in restraining temperatures and pressures in gaseous explosions; other causes are:—

2. A substantial increase in the value of k_v—the specific heat at constant volume—when the temperature is greatly raised;

increase in k_v reduces the maximum temperature and hence the maximum pressure attained.

3. Loss of heat from the exploding gases to the metal walls of the enclosing vessel. In petrol engines, for example, about one-fourth of the whole heat evolved in the cylinder appears in the jacket cooling water.

4. In actual engines the fresh charge becomes somewhat heated on entering the hot cylinder; this results in its expansion, so that the *mass* of the charge taken in during the suction stroke is slightly reduced.

5. The working fluid is not dry air, as is assumed in establishing the theoretical equation (24), but is a mixture of more or less moist air, petrol vapour, and residual gases from the previous exhaust; the k_v of this mixture differs in value from that for air, and increases considerably as the temperature rises.

6. Combustion changes the volume of the combining gases so that the volume which expands differs from that which is compressed. In the case of petrol engines using normal mixtures, the volume is *increased* by 5 per cent. to 6 per cent.

7. Some loss of heat to the cylinder walls takes place during the compression period. This reduces T_2 (fig. 7) and consequently T_3 and p_3.

8. The resistance offered by the carburettor, inlet piping, valves, and passages to the entering mixture prevents the engine from receiving a full charge of fresh gases at atmospheric pressure in each suction stroke.

If d and s denote respectively the cylinder bore and the stroke, both in inches, then in the perfect case the engine would during each suction stroke take in $\frac{\pi}{4}d^2s$ cubic inches of fresh mixture at atmospheric pressure and temperature. Actually it gets considerably less than this; the ratio of the mass of charge actually to that which would be ideally received, is called the Volumetric Efficiency of the engine. The volumetric efficiency in actual cases varies greatly, the range being from about 0·6 for earlier engines up to about 0·9 in recent good designs.

In fig. 7 the blackened diagram is drawn by aid of an indicator diagram taken from a petrol engine running at 1300 revolutions per minute; the maximum pressure attained was about 375 lbs. per square inch (abs.), with a terminal pressure of 52 lbs. per square

inch (abs.). Due to loss of heat during compression, the actual compression curve 1–2″ falls below the adiabatic 1–2; while, owing to some combustion continuing during the working stroke, the actual expansion curve 3′–4″ lies above the adiabatic 3′–4′. The isothermal curve through 3 has been drawn to exhibit the position of the actual expansion curve in this case, relatively to it and to the adiabatic through 3.

It has been found by trial that both the compression and expansion curves of this diagram practically follow the $pv^n = \text{const.}$ law, with a value of 1·23 for n.

If p denote the mean effective pressure in lbs. per square inch, and r be the compression ratio, then from Eqs. (5) and (6) it may easily be found that:

$$p = \frac{r}{r-1}\,\frac{r^{n-1}-1}{n-1}(p_4 - p_1) \quad \text{lbs. per square inch.} \qquad (29)$$

Here $r = 5$, $n = 1{\cdot}23$, $p_4 = 52$, and $p_1 = 14{\cdot}7$; hence $p = 90{\cdot}8$ lbs. per square inch.

The mean effective pressure, p, has been notably increased in petrol engines during the past five years by the adoption of larger and better carburettors, piping, and valves, and by generally so proportioning the engine that the gases enter and leave the cylinders with the least possible resistance. The early designs showed a value of p of 70 to 80 lbs. per square inch only, whereas in present-day engines the average has been raised to fully 100 lbs. per square inch, partly as the result of improved carburation, but mainly by increased volumetric efficiency.

The average indicator diagram may be taken as shown in fig. 8, at normal full load; the explosion peak is rounded off partly by heat loss to the walls of the combustion chamber, partly by expansion of the working gases due to piston movement, so that the maximum pressure realised is about 350 lbs. per square inch, the "peak" being just over 400.[1] The terminal exhaust pressure is about 55 lbs. per square inch (abs.), but as the exhaust valve usually commences to open at about 0·9 of the working downstroke in order to give greater freedom of exhaust, the "toe" of the actual diagram falls away generally as shown in the figure.

[1] If pre-ignition occurs, the pressure may rise to, roundly, 1000 lbs. per square inch, due to the compression of the exploding gases; *vide Int. Comb. Eng.* of 27th November 1912, p. 450.

A compression ratio of 4·5 is taken, the corresponding compression pressure being about 109 lbs. per square inch (abs.). The value of the exponent n is often assumed as $\frac{4}{3}$ in design, and with this value and the assumed data a m.e.p. of practically 100 lbs. per square inch results from Eq. (29). The following actual

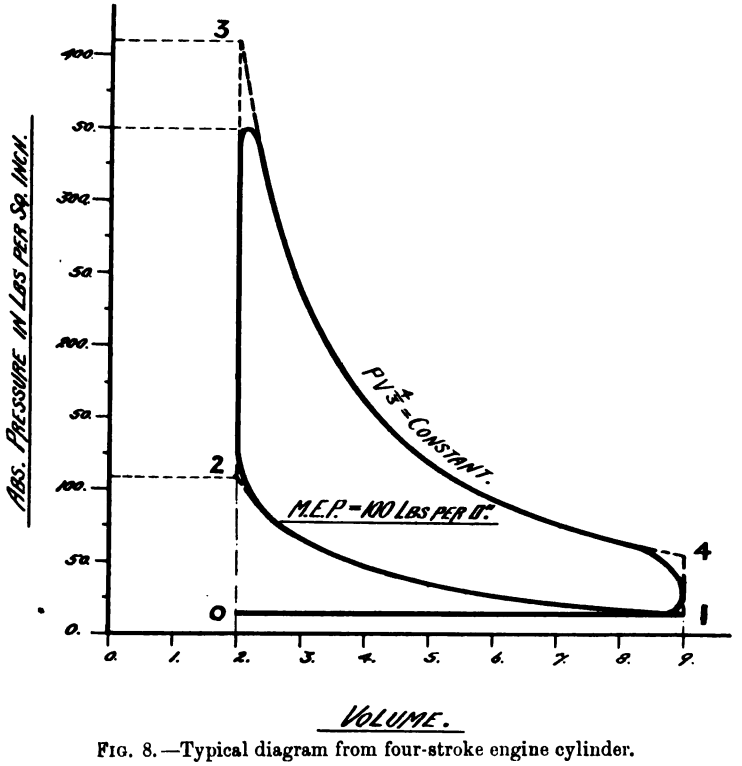

FIG. 8.—Typical diagram from four-stroke engine cylinder.

determinations of n suggest, however, that better average values are 1·23 for the expansion curve, and 1·28 for the compression:—

Engines.	n, Expansion.	n, Compression.
2-cylinder, 400 H.P. Crossley—		
No. 1 cylinder	1·266	1·321
No. 2 „	1·204	1·319
Atkinson engine	1·264	1·205
Daimler, using petrol[1] . . .	1·180	1·290
„ „ benzol[1] . . .	1·250	1·280

[1] Dr Watson, F.R.S., in *Proc. Inst. Aut. Eng.*, 1914–15.

The maximum value of the mean effective pressure, p, attained in racing petrol engines fitted with very large carburettors and piping, double valves, and high compression appears to be, roundly, 140 lbs. per square inch.

The working gas is in a state of violent turbulence and by no means at one uniform temperature throughout its volume at any instant; the "maximum mean temperature" of explosion ranges from about 2000° F. to 3000° F. (ordinary scale). Dr Dugald Clerk has rendered visible the conditions within the cylinder of an explosion engine by fitting a small glass-covered inspection hole in the combustion chamber. He says: "On looking through this window while the engine is at work a continuous glare of white light is observed. A look into the interior of the furnace of a boiler gives a good notion of the flame filling the cylinder of an explosion engine."

With the simplifying assumptions whereby the expression for the efficiency, viz. Eq. (24), is obtained, this depends only upon the ratio of the (abs.) temperatures at the beginning and at the end of the compression stroke. If, then, the mixture be received by the engine in a heated condition, the efficiency is unchanged, the temperature at the end of the compression stroke being proportionately increased. And the heat evolved during explosion being proportional to the mass of fresh charge received, the resulting temperature T_3 is greater than when the engine receives a cool charge.

Now, the simple theory takes no cognisance of heat loss to the piston and cylinder walls during explosion, though this is of all the most important source of loss of heat, and this loss increases with the explosion temperature, T_3, as the cylinder barrel (in water-cooled engines) is kept constantly at about 200° F. Hence *practically* efficiency is *diminished* if the charge is heated during admission, owing to increased heat loss to piston and cylinder walls due to the increased explosion temperature. The *power* output of the engine is also diminished by heating during admission as the charge expands, since the *mass* of mixture taken in is then reduced, and consequently a smaller quantity of heat is evolved during combustion; air-cooled petrol engines not infrequently become temporarily useless through loss of power occasioned by overheating in this way.

CHAPTER II.

THE POWER AND EFFICIENCY OF INTERNAL-COMBUSTION ENGINES.

THE exact formula for the horse-power of a single-acting four-stroke internal-combustion engine having N cylinders each of d inches bore and s inches stroke, and running at n revolutions per minute, is established as follows:—

Denoting, as before, the mean effective pressure in lbs. per square inch by p, the mean useful "indicated" force on each piston per cycle is $\frac{\pi}{4}d^2 \times p$ lbs. This acts through s inches, and hence the useful indicated work per cylinder per cycle is $\frac{\pi}{4}d^2 \times p \times \frac{s}{12}$ foot-lbs. As there are n revolutions per minute, there are $\frac{n}{2}$ complete cycles per minute, and hence the useful indicated work done per cylinder per minute is $\frac{\pi}{4}d^2 \times p \times \frac{s}{12} \times \frac{n}{2}$ foot-lbs.

This being true of each of the N cylinders, they jointly perform indicated useful work per minute expressed by $\frac{\pi}{4}d^2 \times p \times \frac{s}{12} \times \frac{n}{2} \times \mathrm{N}$ foot-lbs. As 1 horse-power is a rate of working of 33,000 foot-lbs. per minute, it is therefore evident that the indicated horse-power (I.H.P.) of such an engine is expressed by:

$$\text{I.H.P.} = \frac{1}{33{,}000}\,\frac{\pi}{4}d^2 p \frac{s}{12}\,\frac{n}{2}\,\mathrm{N}. \quad . \quad . \quad . \quad (30)$$

In the case of a *double-acting* four-stroke engine, and also in that of a *single-acting two-stroke* engine (*vide* pp. 177–186), there is one working stroke in *each* revolution, and accordingly the I.H.P. for these is obtained by writing n instead of $\frac{n}{2}$ in Eq. (30).

If indicator diagrams could be as easily taken of quick-running

petrol engines as can be obtained from large steam or gas engines running at from 100–400 revolutions per minute, the I.H.P. of petrol engines could always be directly determined. But the results obtained with indicators of ordinary type used on a small engine running at 1000–2000 r.p.m. are entirely misleading and valueless, owing to the effects of inertia, cooling, etc. Special optical diaphragm indicators are occasionally employed, however, and with these reasonably accurate diagrams can be attained at speeds up to about 1600 r.p.m.;[1] but the optical indicator is a delicate instrument, requiring care and skill in fitting and adjustment, and is much more suited to the scientific laboratory than the engineering workshop test-room.

It may here be remarked that when diagrams *are* taken it is always necessary to obtain a record of several successive cycles, as it is found that, in general, consecutive diagrams vary somewhat in size and shape, so that an average must be taken in determining the value of the mean effective pressure.

Hence in practice it happens that the I.H.P. of a petrol engine is rarely obtainable, and accordingly in nearly all power tests it is the brake horse-power, or "power at the flywheel," or "shaft horse-power," as it is variously termed, that is determined.

The B.H.P. may always be found easily by means of a brake dynamometer, of which many types are in everyday use. The B.H.P. is, of course, always less than the I.H.P. by the number of H.P. necessary to overcome the internal resistances of the engine itself; the ratio of the B.H.P. to the I.H.P. is termed the mechanical efficiency of the engine, and is here denoted by the symbol η; thus B.H.P. $= \eta \times$ I.H.P., and hence, by Eq. (30), we have for the type of engine there considered:

$$\text{B.H.P.} = \frac{\pi}{33{,}000 \times 4 \times 12 \times 2} d^2 \eta p \, ns \, \text{N}. \quad . \quad . \quad (31)$$

Now it will be observed that, having determined the B.H.P. by test, everything is known in this equation but the value of the product ηp. This can then be at once deduced; for by transposition we get:

$$\eta p = \frac{1{,}008{,}000 \times \text{B.H.P.}}{d^2 \, ns \, \text{N}} \quad \text{lbs. per square inch.} \quad . \quad (32)$$

[1] For a good description of one of these, see Dr Watson, *Proc. Inst. Auto. Eng.*, vol. iii. pp. 391–4.

ηp (eta-p) is usually termed the "brake mean effective pressure"; the mean effective pressure, p, is alone only determinable when a value can be assigned to η. Special experiments have been made at times to determine the value of the mechanical efficiency of petrol engines,[1] and the results obtained show, generally, that η diminishes with increase in speed and with reduction in engine load. η is also affected by the jacket water temperature, and by the nature and extent of the lubrication. For normal engines, at about 1000 to 1200 r.p.m. and at full load, an average value of $\eta = 0{\cdot}83$ can be assumed without risk of much error.

Piston Speed.—If the piston, instead of reciprocating, moved constantly onwards, the distance that would be covered per minute in feet is termed the piston speed, and is usually denoted by σ.

As two strokes are made per revolution, $2n$ strokes are made per minute per piston, and hence $2ns$ inches per minute is travelled; expressed in feet per minute we have therefore:

$$\text{Piston speed} = \sigma = \frac{2ns}{12} = \frac{ns}{6} \text{ feet per minute.} \quad . \quad (33)$$

The piston speed of car and aero engines of normal type ranges from about 1000 to 1500 feet per minute, though in racing engines as much as 3000 feet per minute is sometimes attained for short periods.

Torque, or Turning Moment.—It is sometimes desired to ascertain the value of the mean turning effort, or "mean torque," of a crankshaft of an engine of which all the data, including the B.H.P., are given.

A torque is a couple, and the unit of torque is the turning effort exerted by a pair of equal and parallel forces each of 1 lb. weight acting 1 foot apart; this is termed one pound-foot. Hence, if P lbs. act normally at the end of an arm l feet long, the corresponding torque, T, is given by:

$$T = P \times l \text{ lb.-feet.} \quad . \quad . \quad . \quad . \quad (34)$$

The work done by a torque of T lb.-feet when its arm turns through an angle of θ radians is, from fig. 9, evidently given by:

$$P \times AB \text{ foot-lbs.}$$

But $\frac{AB}{l} = \theta$; *i.e.* $AB = l\theta$. Hence the work done is also expressed

[1] See, *e.g.*, vol. ii. of *The Gas, Petrol, and Oil Engine*, pp. 560–3 (Clerk and Burls) (Longmans, Green & Co.).

by $Pl\theta$ foot-lbs. But the product Pl is, by Eq. (34), the torque, T, in lb.-feet; hence:

$$\text{Work done} = T\theta \quad \text{foot-lbs.} \quad . \quad . \quad . \quad (35)$$

Now, n revolutions per minute $= 2\pi n$ radians per minute, so that the work done by a torque T lb.-feet making n revolutions per minute is $T \times 2\pi n$ foot-lbs., and hence the horse-power is:

$$\text{Torque horse-power} = \frac{2\pi n T}{33{,}000} \quad . \quad . \quad . \quad . \quad (36)$$

If we equate this to the expression for the B.H.P. given in Eq. (31),

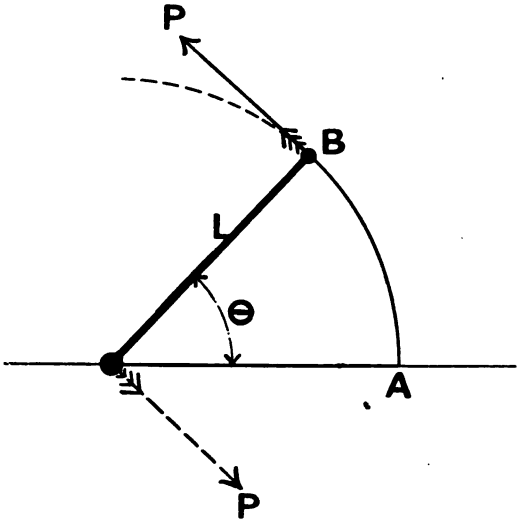

FIG. 9.—Torque or turning effort.

we obtain, on reduction, as the expression for the mean torque, T:

$$T = \frac{1}{192} d^2 \eta p s N \quad \text{lb.-feet.} \quad . \quad . \quad . \quad (37)$$

Power-Speed Graphs.—Brake horse-power tests of petrol engines are usually made over a range of speeds, and by plotting the B.H.P. as ordinates against the corresponding revolutions per minute (or piston speed) as abscissæ, a curve is obtained which shows how the B.H.P. varies with the speed. The type of curve obtained is shown in fig. 10, and it will be noted that at first the power rapidly increases with the speed, but that the rate of increase diminishes until finally the maximum B.H.P. is reached, in this case at a speed of about 2200 revolutions per minute; at higher speeds the power rapidly falls off. The reduction in the rate of

growth of the power with speed arises from the rapid increase in the resistance offered by the piping and valves to the ingress and egress of gas, and to some extent also from the reduced mechanical efficiency at high speeds.

Aero engines wherein the propeller is directly attached to the crankshaft, or to the system of rotating cylinders, usually run at not more than from 1000 to 1200 revolutions per minute, due to propeller considerations; but racing petrol engines fitted with

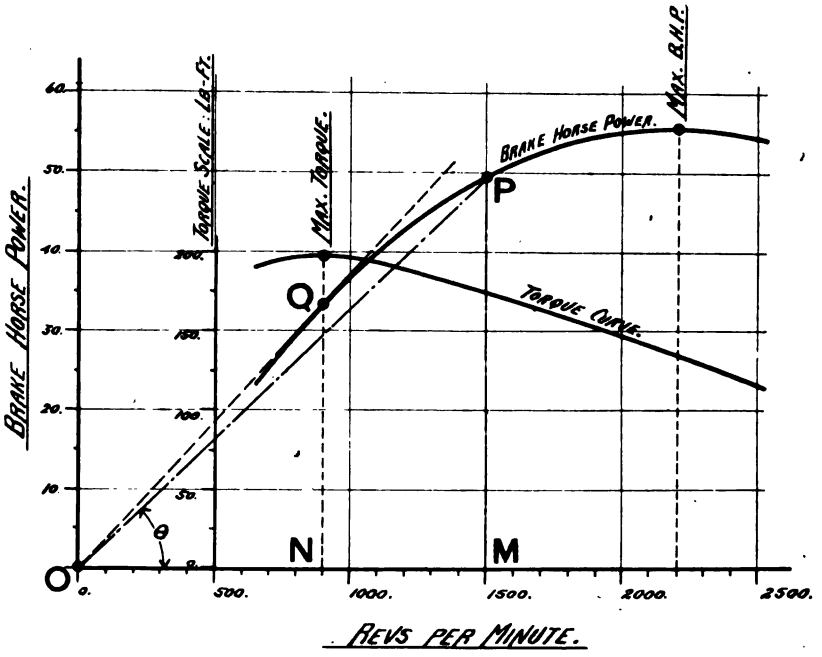

FIG. 10.—Power-speed graph from normal petrol engine.

very large inlet and exhaust piping, double valves, and large carburettors are in existence, running up to 3500 revolutions per minute, with the B.H.P. increasing with the speed right up to this very high value.

From the power-speed curve (or "graph") the mean torque at any speed, and also the maximum mean torque, can be very simply obtained. For Eq. (36) may be written B.H.P. $= \frac{2\pi n T}{33{,}000}$, whence we get by transposition and reduction:

$$T = 5250 \times \frac{\text{B.H.P.}}{n} \text{ lb.-feet.} \quad . \quad . \quad . \quad (38)$$

Now, in fig. 10 let P be any point on the curve; draw the ordinate PM, and join OP, O being a zero origin. Then $\frac{\text{B.H.P.}}{n} = \frac{\text{PM}}{\text{MO}} = \tan\theta$; thus, by Eq. (38), T varies directly as $\tan\theta$; PM and MO must, of course, be measured to their respective scales. On substituting in Eq. (38) the corresponding value of T is found. The maximum value of the mean torque, T, occurs when $\tan\theta$ is a maximum, that is, when θ is a maximum; hence it is determined by drawing from the origin O a tangent to the curve. Let Q be the point of contact; then the maximum torque occurs when the speed is ON and the power is NQ, and its value, by Eq. (38), is:

$$T_{max.} = 5250 \times \frac{QN}{NO} \text{ lb.-feet.}$$

It is usually found that maximum torque occurs at a lower revolution speed than maximum horse-power. In the case of many modern high-powered small petrol engines the power-speed curve is for some distance virtually a straight line passing, if produced, through the origin; for this straight line part θ is constant, and hence also the torque has a constant value.

One other point is worthy of notice. From Eq. (37) it is evident that for the same engine ηp varies directly as T; thus a curve showing the variation of torque with speed shows also, with merely an alteration of scale, the variation of ηp with speed. Such a curve is exhibited in fig. 10. Thus the brake mean effective pressure and also the mean torque both attain their maximum value when the ratio of $\frac{\text{B.H.P.}}{n}$ is at a maximum.

Power Rating Formulæ.—As test-bench determinations of brake horse-power by independent observers prior to a motor race were usually out of the question, a necessity was early felt for some formula, simple in expression and easy to use, which would enable the approximate normal full power of petrol engines varying in bore, stroke, and speed to be quickly obtained as an aid in forming handicaps, and also for general purposes of rating and comparison. Many such formulæ have been proposed, and used to a limited extent, but that universally employed for general rating purposes in Great Britain—though long abandoned as a basis for handicapping—is the very simple expression first adopted in 1906 by

the Royal Automobile Club, and later accepted by the Treasury as the basis for taxation purposes.

From examination of a number of tests of petrol engines in 1906, the Royal Automobile Club concluded that current good practice at that date would be resumed by a rating formula in which the brake mean effective pressure (ηp) had the value 67¼ lbs. per square inch, with an average piston speed $\left(=\frac{ns}{6}\right)$ of, roundly, 1000 feet per minute.

Substituting 67¼ for ηp and 6000 for ns in Eq. (31) gives us, on reduction, the simple and well-known rating formula:

$$\text{R.A.C. or Treasury rating} = 0{\cdot}4d^2\text{N}, \quad . \quad . \quad (39)$$

where d is the cylinder bore in inches, and N is the number of cylinders.

This is the formula by which petrol engines are still nominally rated both for cataloguing and advertising purposes, although the modern petrol engine has a power output always greater, and frequently very much greater, than this formula implies.

Further engine tests were carried out at Brooklands in the summer of 1912, with the object of comparing the B.H.P. developed by recent as compared with old engines. It was found that the 1911–12 engines showed an average of nearly 50 per cent. more than their R.A.C. rating, whereas the older engines, *i.e.* prior to say 1909, in general developed less than their Treasury rating.

In individual cases the improvement in the 1911–12 engines was even more marked, three of the engines tested having a normal output of more than *double* their R.A.C. rating. The average of the Brooklands 1912 tests showed, however, a value of 67¼ lbs. per square inch for ηp—exactly as implied in the old R.A.C. formula—but the prevailing piston speed had then risen to about 1440 feet per minute; hence for the 1911–12 engines a fair average rating formula would be, roundly, $0{\cdot}6d^2$N, or 50 per cent. more than that given by the R.A.C. rule.

Much of the improvement in petrol engines during the past five years (1909–14) has been due to recognition of the necessity of designing the engine not only as a prime mover, but also as a highly efficient pump; the increased pump, *i.e.* volumetric, efficiency, coupled with increased speed obtained by the use of exceedingly light reciprocating parts, enables remarkable results to be achieved.

For example, the four-cylinder 3·54″ × 5·12″ Vauxhall 1914 T.T. racing engine, with a Treasury rating of roundly 20, actually developed 90 B.H.P. at the very high piston speed of about 3070 feet per minute (= 3600 revs. per minute), and thus gave 4½ times as much power as the old formula implied.

Aero engines in general run at a piston speed of from about 900 to 1200 feet per minute, and exhibit values of ηp ranging from 70 to 100 lbs. per square inch; for purposes of rough preliminary power estimate the simple formula:

$$\text{Normal full power} = 0{\cdot}6d^2\text{N} \quad . \quad . \quad . \quad (40)$$

will generally give results of the right order of magnitude.

Brake Thermal Efficiency.—Suppose it to be found by trial that a petrol engine consumes w lbs. of petrol per B.H.P. hour. Taking the calorific value, as before, at 20,000 B.Th.U. per lb., the engine thus receives $20{,}000 \times w$. B.Th.U. per B.H.P. hour. Now 1 horse-power is $33{,}000 \times 60$ foot-lbs., or $\frac{33{,}000 \times 60}{778} = 2545$ B.Th.U. of work per hour; hence $20{,}000 \times w$. B.Th.U. are expended, and 2545 B.Th.U. of work are obtained. The brake thermal efficiency is accordingly expressed by the ratio:

$$\text{Brake thermal efficiency} = \frac{2545}{20{,}000 \times w} \quad . \quad . \quad (41)$$

and in the modern petrol engine ranges in value from 0·20 to 0·27 at normal full load, the latter figure corresponding to a consumption rate of only 0·47 lb. of petrol per B.H.P. hour.

The Standard of Efficiency.—In 1903 a committee of the Institution of Civil Engineers was formed to consider and report upon suitable standards of efficiency for internal-combustion engines.

This committee duly recommended: (1) That air, regarded as a perfect gas, should be considered as the working fluid of the ideal standard engine, with a value of 1·4 for γ; (2) That the standard engine should receive and reject its heat in as nearly as possible the same way as the actual engine under test; and (3) That the standard engine should be considered as suffering no loss from conduction, radiation, etc.

Hence, for a four-stroke engine, the air standard formula of theoretical maximum efficiency is that given in Eq. (25), viz.

$$\text{Air standard efficiency} = 1 - \left(\frac{1}{r}\right)^{\gamma-1}, \quad . \quad . \quad (25)$$

where r is the ratio of compression. As 1·4 is taken for γ, we have then:

$$\text{Air standard efficiency} = 1 - \left(\frac{1}{r}\right)^{0\cdot4}. \quad . \quad . \quad (26)$$

Values of the air standard efficiency for values of r from $3\frac{1}{2}$ to $5\frac{1}{4}$ are given in the preceding chapter.

Relative Brake Thermal Efficiency.—The brake thermal efficiency as given in Eq. (41) is an absolute efficiency, and does not exhibit the degree in which the actual engine approaches the performance of an ideally faultless engine of its own type. This proportion, however, is given by taking the ratio of the brake thermal efficiency given by Eq. (41) to the value of the air standard efficiency for the appropriate value of r, as found from Eq. (26).

For example, an engine using 0·5 lb. of petrol per B.H.P. hour has by Eq. (41) a brake thermal efficiency of 0·2545.

Suppose the compression ratio to be $4\frac{1}{2}$; then $r = 4\cdot5$, and accordingly, from Eq. (26), the air standard efficiency is 0·452; that is, if the engine were ideally perfect, its thermal efficiency would be 0·452. The relative brake thermal efficiency is accordingly $\frac{0\cdot2545}{0\cdot452} = 0\cdot563$. Hence the engine is doing really better than is implied by the 25·45 per cent. brake thermal efficiency, as it is actually turning into useful work 56·3 per cent. of the maximum conceivable.

There is yet one further consideration that may be mentioned. The actual working substance is *not* air of constant specific heat, but a mixture of gases having an apparent specific heat increasing considerably with temperature. The properties of the mixture of gases within the cylinder have been investigated by Dr Dugald Clerk, who has concluded, among other things, that the "air standard" furnishes values of efficiency which are quite unattainable, the actual maxima values being, roundly, 0·8 of those given by Eq. (26). If this view be adopted, the performance of the actual engine is still further improved; in the example just taken, instead of 56·3 per cent., the engine really realises 70·4 per cent. of the conceivable maximum, in the form of useful work.

This is a very gratifying result, especially in engines of such small size. The great economy of these little quick-speed engines is a very striking and valuable feature, and results largely from their high revolution speed; in good cases, of the whole heat

evolved by the combustion of the fuel, 25 per cent. appears as useful work, about 30 per cent. appears in the jacket water, and about 45 per cent. is carried off in the exhaust gases.

A consumption of 0·5 lb. of petrol per B.H.P. hour is now becoming a common performance of aero engines at normal full load; this corresponds to, roundly, 10,000 B.Th.U. of heat supplied to the engine per B.H.P. hour. Adopting the proportionate expenditure just mentioned, the cooling system must be so designed as to deal with 3000 B.Th.U. of heat per B.H.P. of the engine, per hour.

Allowing 40° F. as the rise of temperature of the cooling water in passing through the cylinder jackets, it follows that $\frac{3000}{40 \times 60} = 1\frac{1}{4}$ lbs. or just one pint of water must be circulated through the jackets per B.H.P. *minute.* The heat lost by the water in the radiator is communicated to the air stream which passes through it; the value of k_p for air being 0·2374 B.Th.U. per lb. ° F., it appears further that $\frac{1{\cdot}25}{0{\cdot}2374} = 5{\cdot}26$ lbs. of air are necessary per B.H.P. minute. At atmospheric pressure and 50° F. this mass of air has a volume of nearly 70 cubic feet.

So that about 70 cubic feet of air are necessary for cooling purposes per B.H.P. minute. Thus in direct air-cooling the bulk of air necessary is very great, and hence it is not surprising to find that aero engines, especially of the fixed-cylinder air-cooled type, not infrequently give trouble from overheating.

Volumetric Efficiency.—This is the ratio of the volume of charge taken in per suction stroke—estimated at normal temperature and pressure—to the volume displaced by the piston per stroke.

For the complete combustion of 1 lb. of average petrol to CO_2 and H_2O, roundly 15 lbs. of air are theoretically necessary. Actual tests of engines, however, seem to show that about 14 lbs. is sufficient, the combustion being apparently not quite so complete as theory assumes.

The range of mixtures that may be used in petrol engines is from about 11 to 17 lbs. of air per lb. of petrol, but 11 : 1 is a very rich mixture, and ordinarily the range is narrower, say from about 12 to 15 lbs. per lb. Maximum *thermal* efficiency is attained with a dilute mixture, of the order of 17 : 1, whereas maximum

power occurs when the mixture is a little "rich." With dilute mixtures there is an excess of oxygen present, and the exhaust contains no carbon monoxide; with rich mixtures there is a deficiency of oxygen, some CO appears in the exhaust, and thus some of the available heat of the fuel is wasted.

For ordinary normal full load working it may generally be assumed that the mixture is about $13\frac{1}{2}$ lbs. of air per lb. of petrol, and that the $14\frac{1}{2}$ lbs. of mixture has a volume of $13\frac{1}{2} \times 13 + 4 =$ say 180 cubic feet at ordinary temperature and atmospheric pressure.

Suppose a test to show that an engine using a W : 1 mixture consumes w lbs. of petrol per B.H.P. hour. Let P be the B.H.P. *per cylinder*. Then each cylinder receives $w\mathrm{PW} + w\mathrm{P}$, that is, $w\mathrm{P}(\mathrm{W}+1)$ lbs. of mixture per hour, and this has a volume, at ordinary pressure and temperature, of, roundly, $w\mathrm{P}(13\mathrm{W}+4)$ cubic feet.

If σ denote the piston speed in feet per minute, and A be the area of the piston in square *feet*, then $\frac{\sigma \mathrm{A}}{4}$ is approximately the volume of the "suction cylinder" in cubic feet per minute, so that $60 \times \frac{\sigma \mathrm{A}}{4}$, that is, $15\sigma\mathrm{A}$, is its volume in cubic feet per hour.

Hence, if λ denote the volumetric efficiency, we have:

$$\lambda = \frac{w\mathrm{P}(13\mathrm{W}+4)}{15\sigma\mathrm{A}} \text{ (app.)}. \qquad (42)$$

The practical difficulty in using this formula arises from the fact that W—the number of lbs. of air used per lb. of petrol—is rarely determined. It *may* be found by direct measurement of the ingoing air, but can be more readily found, approximately, by an exhaust-gas analysis used in conjunction with a diagram due to Dr W. Watson.[1]

Volumetric efficiency diminishes as the revolution speed is increased, owing to increased resistance to the passage of the working gases through the engine. In modern engines with large valves and piping the volumetric efficiency is not only high, but is well maintained at high revolution speeds. The earlier designs, however, gave values which diminished rapidly with increase of speed, as is shown by the Table hereunder:—

[1] Vide *Proc. Inst. Aut. Eng.*, vol. iii. p. 420.

VARIATION OF VOLUMETRIC EFFICIENCY WITH SPEED—
PETROL ENGINES OF 1906–8.

Bore in inches.	Stroke in inches.	Revs. per minute.	Volumetric efficiency.
3·56	5·11	720	0·65
		1000	0·53
		1220	0·46
4·62	5·08	530	0·83
		930	0·69
3·35	4·73	500	0·78
		1000	0·69
		1300	0·63

The remarkable increase in power output in modern petrol engines, due mainly to the maintenance of high volumetric efficiency at very high revolution speeds (3500–4000 per minute), is exhibited clearly by a statement of the power developed per pint (or litre if preferred) of total piston displacement, $\frac{\pi}{4}d^2sN$.

Early engines gave, roundly, 4 to 5 B.H.P. per pint of displacement; modern quick-speed small touring-car engines give 7 to 8 B.H.P. per pint; while racing engines, in many cases fitted with double valves, give from 14 to 18 B.H.P. per pint, this latter figure being attained with large double valves placed in the cylinder heads.

CHAPTER III.

AERO ENGINES.

Some general considerations; the necessity for lightness; the Atlantic flight; leading particulars of the aero engines of 1910.

PETROL engines are used for the propulsion of two distinct classes of air-craft, viz.:—

1. Dirigibles, or lighter-than-air machines.
2. Aeroplanes, or heavier-than-air machines.

The engines of the huge and somewhat unwieldy and hapless "dirigibles" have in general a high power output; for example, the Zeppelin L. II., so disastrously wrecked on 17th October 1913, was propelled by four engines each of 200 horse-power. In these engines the necessity for extremely low weight per horse-power is not so pressing as in the case of aeroplane engines, and they can, and often do, follow more nearly the normal car type of engine, lightly built but sufficiently robust to ensure a reasonably long working life without requiring a disproportionate amount of special care and attention.

In the case of the aeroplane it is, however, of much importance that the engine weight per horse-power be kept at the lowest possible value, for the following five reasons:—

1. To confer the ability to climb rapidly.
2. To reduce gross weight and thus improve the "gliding angle."
3. To increase safety when flying in a high wind.
4. To enlarge the radius of action of the machine.
5. To give the aeroplane as wide a range of flying speeds as possible.

1. An aeroplane must be capable of climbing rapidly, in order that it may clear the earth within as restricted a distance as possible—as, for example, if located in a small field surrounded by

trees. Again, in warfare rapid climbing is essential to enable the machine to remove itself quickly beyond the range of the enemy's guns, or to get above a hostile aeroplane.

For the purpose of illustration one may take the following as average data for an ordinary monoplane:—

Weight of machine, light	1100 lbs.
Weight of pilot and mechanic	350 „
Petrol (7 gallons per hour) and oil ($1\frac{1}{2}$ gallons per hour) for $4\frac{1}{2}$ hours' flying . . .	300 „
Initial gross weight =	1750 lbs.
Mean gross flying weight	1600 lbs.
Brake horse-power of engine	75
Mean full flight speed, miles per hour . .	60
Total supporting area in square feet . .	300
Mean rate of wing loading, lbs. per square foot	$5\frac{1}{3}$
Gliding angle	1 in 6

Hence:

Weight of machine	light = (roundly)	15	lbs.	per B.H.P.
Mean „ „	loaded = „	$21\frac{1}{2}$	„	„

When flying at normal speed the machine experiences a total resistance to its horizontal motion of, roundly, one-sixth of its weight, or $\frac{1600}{6} = 267$ lbs. Hence the *effective* horse-power must be $\frac{267 \times 60 \times 5280}{60 \times 33{,}000} = 42{\cdot}8$; assuming a propeller efficiency of 70[1] per cent., the engine output for normal horizontal flight must be $\frac{42{\cdot}8}{0{\cdot}7} = 61$ B.H.P.

Any engine power in excess of this is available for climbing purposes, and the greater the available excess for the same gross weight of machine—that is, the lighter the engine is for its power—the greater is the rate of climbing.

We have here, on the data assumed, a margin of $(75 - 61) = 14$ B.H.P. or $0{\cdot}7 \times 14 = 9{\cdot}8$ *effective* horse-power available; accordingly, neglecting vertical resistances, the mean climbing rate will be $\frac{9{\cdot}8 \times 33{,}000}{1600} = 200$ feet per minute.

[1] A better averagely good value of the propeller efficiency would be 60 per cent.

2. A good gliding angle implies a low loading per square foot of wing area. Lilienthal's glider at Rhinow in 1893, with a loading of only $1\frac{1}{2}$ lbs. per square foot, had a gliding angle of 1 in 8. In normal monoplanes from 4 to 6 lbs. per square foot is usual, the corresponding gliding angle being about 1 in 6; thus, from an altitude of 1000 feet the pilot has a choice of alighting anywhere within a radius of rather more than one mile upon the earth below. Descent is usually made with the propeller revolving idly, so that the engine may be at once switched on if required.

The lighter the engine the lower the wing loading per square foot, and hence the better the gliding angle.

3. When flying in high and variable winds the engine power maintains the necessary velocity of propulsion relatively to the *air*, whereas the usefulness of an aeroplane is dependent on the velocity of which it is capable relatively to the *earth*; hence a high air-speed is necessary, some builders holding that the engine power provided should suffice to give an air-speed equal to twice that of any wind likely to be encountered, so that, on this view, it would be necessary to design for a maximum air-speed of, roundly, 100 miles per hour in this country.

As the power, *cæteris paribus*, varies as the cube of the air-speed, a high power is again clearly essential, and this must be associated with the least possible weight. Great power and low weight are also needed to enable the aeroplane to accelerate rapidly when flying up-wind, so as to retain a steady horizontal course when lulls occur.

A considerable reserve of power, combined with small mass, is especially necessary to enable the machine to be turned quickly from an up-wind to a down-wind direction when the wind is high, in order that it may rapidly acquire the large addition to its kinetic energy implied by its necessarily increased speed relatively to the earth when running down-wind.

Thus, with the data as above, and in a 50 m.p.h. gale, if the aeroplane be flying up-wind at an air-speed of 70 m.p.h. its *earth*-speed will be only 20 m.p.h., and its kinetic energy accordingly $\frac{1}{2g} \times 1600 \times (29{\cdot}3)^2 = 21{,}377$ foot-lbs.

If the least air-speed necessary for horizontal flight be 40 m.p.h., on turning and running down-wind the earth-speed of the machine must be at least $(50+40) = 90$ m.p.h., and hence the kinetic energy

must be increased to 432,900 foot-lbs., roundly. This increase of 411,523 foot-lbs. of energy must be supplied by the engine, which must thus be capable of developing a considerable excess of power to enable this manœuvre to be rapidly performed. Assuming in this case that 10 *effective* horse-power is available, this would, *cæteris paribus*, enable the turn round to be made in $\frac{411,523}{10 \times 33,000}$ = about $1\frac{1}{4}$ minutes.

4. A large radius of flight without descending to the earth to replenish the fuel and oil tanks is obviously, in general, an important desideratum. Long-distance flights over seas—as, for example, Garros' crossing of the Mediterranean in September 1913 (about 460 miles in 8 hours)—are only possible when the maximum of power output is combined with the minimum of weight.

In 1907 F. W. Lanchester[1] estimated the maximum possible range of flight at that time as only 360 miles; much progress has, however, been made since that date, and in 1913 M. Seguin made a non-stop flight from Paris to Bordeaux and back, the distance being, roundly, 650 miles and time occupied 13 h. 5 m.; thus the average earth-speed was, roundly, 50 miles per hour.

The Atlantic Flight.—The extreme difficulty of achieving a non-stop flight across the Atlantic Ocean in the present state of the art of flying is apparent. A. E. Berriman in 1913[2] discussed the possibility of success, assuming 100 B.H.P. available, and that the aeroplane, light, weighs 15 lbs. per B.H.P.; the weight per B.H.P. is then made up as follows:—

	Lbs. per B.H.P.
Aeroplane, light	15
Two pilots, 300 lbs.	3
	18

The petrol consumption is taken at 0·5 lb. per B.H.P. hour, and the oil may be assumed as 0·1 lb. per B.H.P. hour. The total distance to be traversed is, roundly, 2000 miles, and at 70 m.p.h. will occupy, roundly, 30 hours; hence $30(0{\cdot}5+0{\cdot}1)=18$ lbs. of fuel and oil must be carried per B.H.P. Thus the total load per B.H.P. at starting would be $18+18=36$ lbs.; this would be gradually reduced, during the journey, to 18 lbs.; the mean load per B.H.P. throughout would

[1] *Aerodynamics*, § 219. [2] *Aviation*, pp. 301–2.

thus be 27 lbs. The resistance being assumed at the usual value of one-sixth of the weight, this would correspond to a head resistance, at starting, of 6 lbs. per B.H.P., and an average throughout of 4½ lbs. per B.H.P.

6 lbs. resistance at 70 m.p.h. requires an *effective* horse-power of $\frac{70 \times 5280 \times 6}{60 \times 33{,}000} = 1{\cdot}12$, so that, on the assumed data, success would be impossible, as the propeller efficiency would have to be greater than unity.

At the mean value of 4½ lbs., the effective horse-power required would be 0·84, which is still an unattainably high propeller efficiency.

Berriman is of opinion that the most promising direction of improvement is that of reducing the resistance of the fuselage, landing chassis, stays, etc., so that the resistance of the whole machine at 70 m.p.h. may become appreciably less than the present average value of 1 : 6 as assumed above.

The ratio of resistance to lift for the wings alone is ordinarily about 1 : 10; the body or "fuselage," landing chassis, stays, etc., add to the weight but contribute nothing to the lift, and thus for the whole machine the ratio of resistance to lift is usually about 1 : 6. Mr F. W. Lanchester (James Forrest Lecture, 1914), indeed, states that the ratio of resistance to lift of the wings alone may be as low as 1 : 12 or 1 : 14, and that values even less than these are now realised in existing machines.

With reference to body resistance, he also states than in present-day aeroplanes this resistance is commonly equal to that of at least 5 square feet of normal plane, but he considers that by continued experimentation it may be reduced to that of only 1 square foot of normal plane, while the chassis, stays, and remaining resistances jointly need not necessarily exceed the equivalent of a further 2 square feet, making 3 square feet in all.

In the above calculation, let the resistance-lift ratio for the wings be taken as 1 : 12, and the resistance of the body, chassis, stays, etc., be jointly equivalent to that of a normal plane of 4 square feet in area, which is about 60 lbs. at 70 m.p.h.

Then, at starting, there is per B.H.P., on the assumed data, a wing resistance of $\frac{36}{12} = 3$ lbs., and a body resistance of $\frac{60}{100} = 0{\cdot}6$ lb., or a total of 3·6 lbs.

To overcome a resistance of 3·6 lbs. at 70 m.p.h. demands an *effective* horse-power of $\frac{3{\cdot}6 \times 70 \times 5280}{60 \times 33{,}000} = 0{\cdot}672$, so that the propeller efficiency would have to be 67·2 per cent., an attainable value.

Hence it would appear that the successful crossing of the Atlantic is just within the realm of possibility with resistances reduced to the extent indicated.

One favourable circumstance remains to be pointed out. It fortunately happens that when very long distance flights are contemplated the engine weight per B.H.P. becomes of relatively less importance than in normal circumstances. The reason of this is that for great distances the necessary weight of petrol and oil carried exercises a dominating influence; it will be noted in the case above taken that the petrol and oil have jointly a weight equal to that of the aeroplane and its two pilots. Now, an addition of 3 lbs. weight per B.H.P. would enable a stoutly built water-cooled engine, more economical in petrol and oil than above assumed, to be used for the propulsion of the machine. Thus the initial load per B.H.P. would only be of the order of about 38 lbs., and the total resistance at starting about 3·77 lbs.; the corresponding propeller efficiency necessary would then be, roundly, 70 per cent.

5. **Range of Speed.**—For a given gross weight, wing area, and angle of incidence, there is a corresponding definite velocity, and consequently power, necessary for the maintenance of horizontal flight. If the power developed be less than this value, the aeroplane will descend; if greater, it will pursue a rising course. Aeroplanes having only just about sufficient power to maintain horizontal flight have been frequently observed in racing contests where pilots have reduced the wing area prior to the race. Reduction of wing area necessitates a greater velocity to maintain horizontal flight, and in the limit one gets a single-speed machine with no reserve of power. Such machines are dangerous, firstly, because any weakening of the engine necessitates descent, and an engine stoppage may involve descent at so steep an angle as to result in disaster; secondly, because the maximum speed must be attained before the aeroplane will leave the ground, which makes starting difficult, and requires a great distance over which the machine must "roll"; and thirdly, because the landing speed becomes too high for convenience, or even for safety. Hence,

again, it is seen that a reserve of power is necessary, *i.e.* as low a ratio of gross weight to maximum power as is possible.

The 1913 Gordon-Bennett Cup was won by a Deperdussin monoplane fitted with a 160 H.P. Gnome engine, at the enormous average speed of 124½ miles per hour; this was achieved by a material reduction in the wing area prior to the contest, and involved considerable risk to the pilot. Under the new rules of this competition each aeroplane must prove its ability to fly at a speed of only about 42 miles per hour before it will be allowed to participate in the contest. The specification of the Royal Aircraft Factory for the R.E.I. reconnaissance aeroplanes requires these machines to possess a range of flight speeds from 48 to 78 miles per hour.

Thus, for normal service, there is an overwhelming case for as light an engine as possible in aeroplane construction; this necessity involves engines of delicacy and fragility which require in general a very large amount of skilful attention, and frequent dismantling for adjustment and renewals of parts; such engines are necessarily also expensive in first cost and in maintenance.

Many of the early attempts at mechanical flying were made with engines of very small power; in the early part of 1909, A. V. Roe, for example, fitted one of his triplanes with a 10 H.P. J.A.P. engine, and succeeded a little later in actually flying with only 14 H.P. Experience soon proved, however, that much more power was necessary, for the reasons already given. Again, Blériot's famous flight across the English Channel on 25th July 1909 was accomplished in a small monoplane fitted with a three-cylinder air-cooled "fan" type Anzani engine of, roundly, 25 horse-power (*vide infra*). The gross flying weight was only about 650 lbs., wing area 150 square feet, angle of incidence about 8°, and average speed of crossing about 40 miles per hour.

Assuming the total resistance as one-sixth of the gross weight gives, roundly, 110 lbs. resistance overcome at 40 m.p.h., thus requiring 11¾ *effective* horse-power, or, taking ⅔ as the propeller efficiency, a necessary brake horse-power of about 17½. It is thus clear that under exceedingly favourable circumstances, *e.g.* in still air, a quite small power may suffice; but such favourable circumstances rarely occur, and the ability to fly with safety when the atmosphere is in its usual turbulent condition necessitates

LEADING PARTICULARS OF THE PRINCIPAL AERO ENGINES IN THE YEAR 1910.

Name of engine.	Air- or water-cooled.	No. of cylinders. N.	Cylinder bore in inches. d.	Stroke in inches. s.	Ratio of stroke to bore.	Normal speed. Revs. per minute. n.	Piston speed. Feet per minute. σ.	Brake horse-power.	Stated weight of engine. lbs.	Weight in lbs. per B.H.P.
I. Horizontal Engines.										
Darracq . .	W.	2	5·12	4·73	0·92	1500	1185	24·2	121	5·0
,, . .	W.	4	5·12	4·73	0·92	1500	1185	48·4	242	5·0
Duthiel-Chambers	W.	2	5·04	5·12	1·02	1200	1025	24·2	132	5·5
,, .	W.	4	5·04	5·12	1·02	1200	1025	48·4	164	3·4
,, .	W.	6	5·04	5·12	1·02	1200	1025	72·6	385	5·3
,, .	W.	4	6·3	5·52	0·88	1200	1100	75·8	550	7·3
,, * .	W.	2	4·33	11·8	2·73	1000	985	37·6	220	5·9
[illegible]	[illegible]	[illegible]	[illegible]	[illegible]	[illegible]	[illegible]	[illegible]	[illegible]	[illegible]	[illegible]
,, . .	W.	8	4·57	5·52	1·21	1100	1010	82	...	...
Grégoire . .	W.	4	3·62	5·52	1·5	1500	1380	26·1	174	6·6
,, . .	W.	4	5·12	5·52	1·08	1000	920	51	242	4·7
Métallurgique	W.	4	3·94	5·91	1·5	1850	1820	32	300	9·4
,,	W.	4	4·92	5·98	1·2	1600	1600	48·5	550	11·3
N.E.C.‡ . .	A.	4	4·48	3·98	0·89	1500	1000	69·6	290	4·15
Panhard .	W.	4	7·28	7·88	1·08	900	1180	112	836	7·5
,, .	W.	4	6·69	6·69	1·0	900	1000	90	523	5·8
,, .	W.	4	4·92	5·91	1·2	900	885	48·5	466	9·6
Renault . .	W.	4	4·33	6·3	1·45	1100	1155	38·5	286	7·4
,, § .	W.	4	4·57	5·91	1·3	1300	1280	42·5	880	20·7
Vivinus . .	W.	4	4·17	4·73	1·14	1600	1260	32·5	...	...
,, . .	W.	4	4·42	5·12	1·16	1600	1365	37·5	336	9·0
,, . .	W.	4	4·53	5·12	1·13	1800	1535	39·2	280	7·1
Wright . .	W.	4	4·25	4·33	1·02	1200	870	32·5	176	5·4
V. Rotary Engines.										
Gnome . .	A.	5	3·94	3·94	1·0	1300	850	34	132	3·9
,, . .	A.	7	4·33	4·73	1·1	1200	950	61·5	165	2·7
,, . .	A.	14	4·33	4·73	1·1	1200	950	123	220	1·8
International .	A.	4	3·74	2·52	0·67	1500	630	21·5	80	3·7
,, .	A.	6	5·0	3·98	0·8	1500	1000	66	130	1·9

* Two pistons in each cylinder driving crankshafts, one at each end, as in the Gobron-Br design.

† Used for dirigibles. Designed for the propulsion of dirigibles.

‡ This was a two-stroke cycle engine.

[*To face*

the provision of about four times as much power as M. Blériot employed.

The demand for a light and powerful motor quickly produced a large number of very ingenious and beautifully constructed engines; so early as 1910, J. S. Critchley[1] tabulated particulars of the principal aero engines then on the market. The accompanying Table is based on Critchley's collection; the figures in the column headed "Brake horse-power" are derived from the "S.M.M.T. rating formula:[2]

$$\text{B.H.P.} = \cdot 197(d-1)(2d+s)\text{N} \quad . \quad . \quad . \quad (43)$$

and not from actual test.

In addition to these there were also in 1910 several aero engines of unusual type, as, *e.g.*, the very ingenious four-cylinder rotary Burlat engine, in which both the cylinders and the crankshaft revolved, the rate of crankshaft revolution being double that of the cylinders; and again, the circular Beck rotary motor, in which the pistons not only reciprocated but also partook of the rotary motion of the annular cylinder within which they worked.[3]

The brake horse-power being estimated by formula and not ascertained by test, the figures given for weight per B.H.P. must be accepted with reserve. The formula gives a reasonably good approximation to the normal output of the usual fixed-cylinder type of engine, but credits the air-cooled rotary type with too great a power, as in these engines the volumetric efficiency is, in general, low, and there is further a notable loss of power occasioned by the air resistance to the rapid rotation of the cylinders.

Broadly, all the horizontal, diagonal, and vertical engines of which particulars are given were water-cooled, while those of radial and rotary type were air-cooled; of the 76 engines mentioned, 56 were water-cooled and 20 air-cooled.

The average estimated B.H.P. was considerably less than increased experience has now shown to be necessary. The following brief summary exhibits the average B.H.P., weight per B.H.P., and other particulars of the five classes to which the engines are referred:—

[1] *Proc. Inst. A. E.*, vol. iv.

[2] This rating formula is no longer used.

[3] For a further account of these engines, vide *Proc. Inst. A. E.*, vol. iv. pp. 52–56 and 82–84; and for the Burlat, the last chapter of this book.

SUMMARY OF 1910 AERO ENGINES.

Type of engine.	Number of engines in class.	Prevailing cooling system.	Average estimated B.H.P.	Average weight in lbs. per estimated B.H.P.
Horizontal. . .	10	Water	55·6	6·0
Radial . . .	12	Air	39·2	4·7
Diagonal . . .	25	Water	57·4	5·3
Vertical . . .	24	,,	56·1	7·0
Rotary . . .	5	Air	61·2	2·8

CHAPTER IV.

HORIZONTAL AERO ENGINES.

Horizontal Aero Engines.—The opposed two-cylindered four-stroke single-acting horizontal engine with two cranks at 180° (fig. 11, at A) has frequently been proposed both in car and aeroplane service, but notwithstanding its excellent balance, combined with the advantage of a working impulse every revolution, it has not become established save in one or two special cases, as, for example, that of the well-known Douglas motor cycle.

The opposed horizontal cylinder arrangement produces a long and somewhat bulky engine, rather difficult to fit between the front members of a car chassis, and this probably accounts largely for its neglect in automobile practice. In aeroplane service the comparatively large power necessary would involve two rather large cylinders, and would render difficult—without the objectionable addition of a flywheel—the maintenance of the extreme steadiness of motion demanded by the air propeller, which practically necessitates the employment of a larger number of cylinders individually of small bore.

The horizontal arrangement has also been adopted with four cylinders, the disposition being as indicated in fig. 11 at B; it will be noted from the table of aero engines in the preceding chapter that both Messrs Darracq and Dutheil-Chambers in 1910 marketed aero engines of the horizontal opposed two- and four-cylindered type. In the four-cylindered engine there is again an excellent balance, and two impulses every revolution are obtained; obviously, however, the engine is much longer than the ordinary four-cylinder vertical type.

Occasionally the four-cylinder horizontal opposed engine has been "twinned" by the addition of a second set of four cylinders in a plane at right angles to the first, and operating on the same

cranks, as illustrated in fig. 11 at C; in this case the eight cylinders furnish four working impulses per revolution, with a most excellent balance. The addition of the second set of cylinders, however,

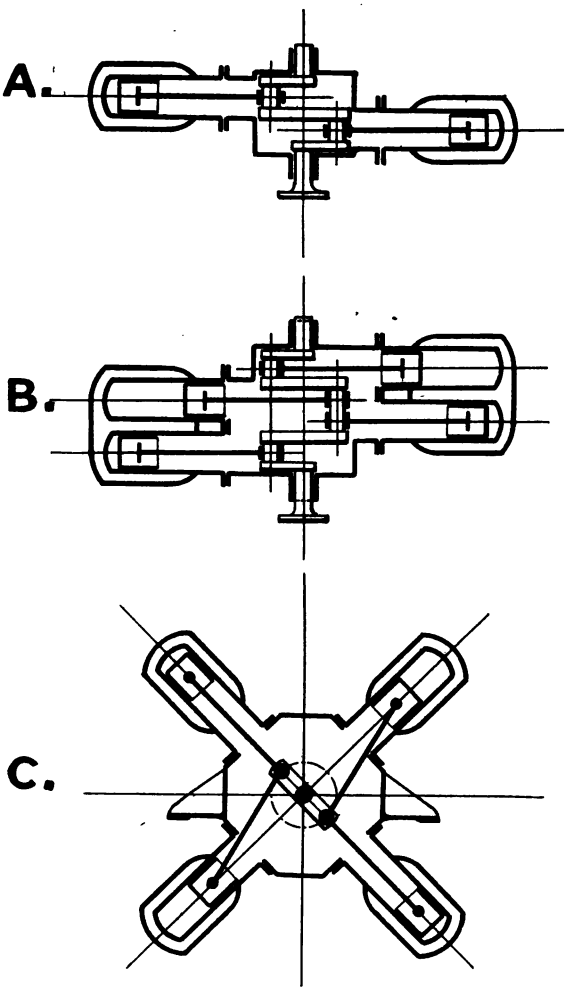

FIG. 11.—Arrangements of horizontal opposed engines.

brings the arrangement within the class of "radial engines." The Gobron-Brillié Company built such an eight-cylindered engine, each cylinder being open at both ends and fitted with two pistons and connecting-rods, agreeably with their well-known practice.

Fig. 12 shows an external view of the engine by aid of which,

on 16th September 1909, Santos Dumont flew from St Cyr to Buc, a distance of about 10 miles, in 15 minutes on his tiny aeroplane "Demoiselle." This was one of the smallest machines that has succeeded in actually flying; the span of the wings was but 18 feet, chord 6½ feet, and extreme fore-and-aft length 20 feet; the total weight, exclusive of the pilot, was 242 lbs., of which the engine weighed about 120 lbs.; the two-bladed propeller was 6′ 6″ in diameter, and was keyed on to the engine crankshaft.

The engine (figs. 11, A, and 12) was one of the 5·12″ × 4·73″ two-cylindered opposed horizontal 25 H.P. Darracq type, without

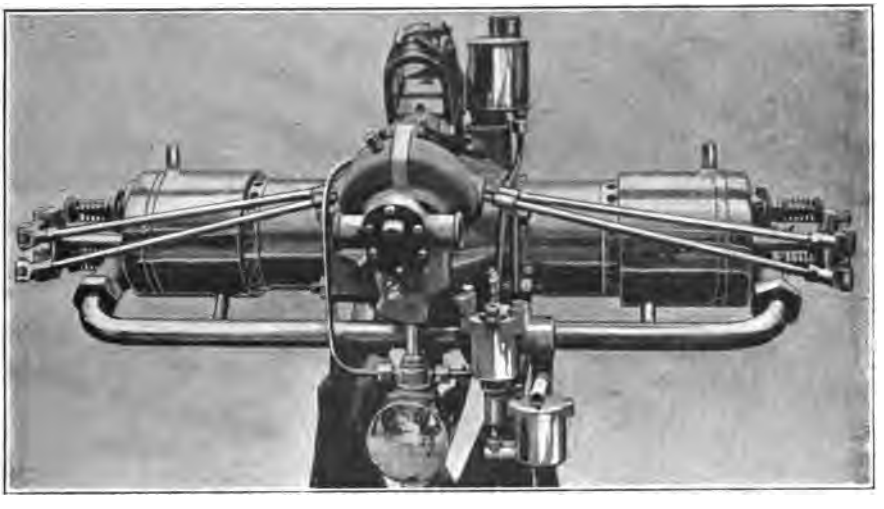

FIG. 12.—Two-cylinder horizontal opposed Darracq engine.

flywheel, and revolved normally at 1500 revolutions per minute. The cylinders were of steel, machined from solid ingots and fitted with copper jackets hard soldered in place; the valves were located in the cylinder heads and operated by push-rods and rockers. Auxiliary exhaust ports consisting of a row of holes about ½″ in diameter were provided in the cylinder walls and overrun by the pistons when near the end of the stroke; these gave increased freedom of exit to the burnt gases; they are shown in the illustration.

One carburettor only was provided, a long induction pipe connecting this to the outer end of each cylinder as shown; ignition was by high-tension magneto, the machine being fitted on top of the crank-chamber; the cooling water was circulated by a

pump. The engine was lubricated by oil sprayed into the crank-chamber by means of a suitable pump.

The Dutheil-Chambers engines were generally similar to the above; the two-cylindered engine was sometimes furnished with a steel flywheel with wire spokes, in order to steady the motion; the cylinders were attached to the crank-chamber by long steel bolts passing through bridge-pieces placed across the combustion chambers, thus relieving the working barrels of the cylinders from longitudinal stress due to the explosions. This feature appeared also in the opposed horizontal "Alvaston" engines, the bolts in this case being of vanadium steel; auxiliary exhaust ports were also provided in the Alvaston motors. An *air*-cooled two-cylindered horizontal opposed engine was made in Germany by Palons & Beuse; this was a light engine with hollow crankshaft and automatic inlet valves; these and the exhaust valves were located in the cylinder heads, the exhausts being operated by push-rods and rockers. Here also the light cast-iron cylinders were attached to the crank-case by long bolts passing through lugs cast on the outer ends of the cylinders; two carburettors were fitted, attached directly to the combustion chambers. In order to reduce the weight to the uttermost, lightening holes were drilled along the webs of the connecting-rods and even also of the valve rockers. As already stated, however, the opposed horizontal type of engine is now abandoned for air service. We proceed, therefore, to some consideration of a more popular type characterised by a star-wise disposition of the cylinders.

CHAPTER V.

RADIAL AERO ENGINES.

Radial Engines.—A wholesome fear of the evils resulting from excessive cylinder lubrication resulted in the early radial engines exhibiting a fan-like arrangement of the cylinders, the axes of all being inclined upwards from the crankshaft; the best known of these were produced by Anzani and Robert E. Pelterie. The fan-type has not survived, increased experience having shown that with carefully designed forced lubrication the cylinders may be symmetrically disposed around the crankshaft without any fear of those below the horizontal becoming flooded.

A sectional view of the 25 H.P. three-cylinder fan-type Anzani aero engine appears in fig. 13. This engine is worthy of special mention, as it was used by M. Blériot in his memorable flight across the English Channel on 25th July 1909; the engine drove a two-bladed propeller, and the output was about 25 B.H.P. at 1400 revolutions per minute.

Prior to constructing aero engines, M. Anzani had already become well known as a builder of cycle motors, and inspection of fig. 13 shows at once the influence of this previous experience, his aero engine closely resembling a three-cylinder cycle motor.

It will be noted that the air-cooled cast-iron cylinders are fitted with valves in a pocket at one side, the inlet valves being of the automatic variety, long abandoned in car and cycle practice, while the exhaust valves are operated in the usual manner, each having its own short half-speed shaft, gear-wheel, and cam, as shown in the central drawing of fig. 13.

In almost all aero engines at the present date (1914), the valves are placed in the cylinder head; some designs still retain the automatic type of inlet valve, but it is probable that this will gradually disappear, as has been the case in other directions.

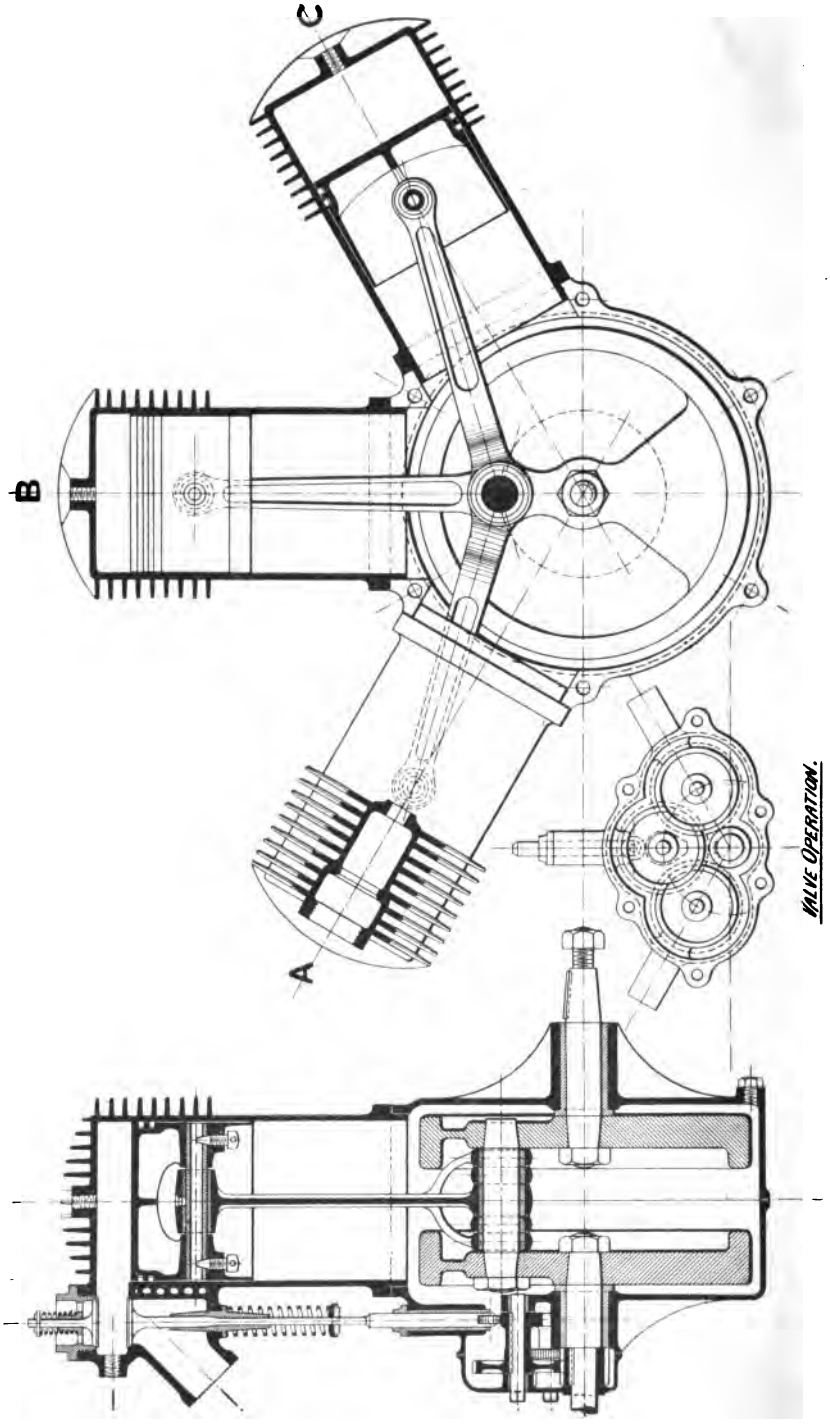

FIG. 13.—Sectional views of three-cylinder Anzani fan-type engine.

The fan type of engine is obviously badly balanced, and to reduce the cyclic speed fluctuation it was necessary to use the two heavy internal counter-weighted flywheels shown. It is clearly very undesirable to use for aeroplane work a type of engine requiring balance weights, an important reduction of weight being attained by employing a self-balanced engine.

The bore of this engine was 3·94″ and the stroke 5·92″; hence at 1400 revolutions per minute the piston speed was 1380 feet per minute, and the output of 25 B.H.P. implied a brake mean effective pressure (ηp) of 65½ lbs. per square inch (Eq. 32), which is low compared with values now commonly attained, and resulted from diminished volumetric efficiency due to the automatic inlets and small valve diameters.

The petrol consumption is stated to have been 0·6 lb. per B.H.P. hour, corresponding to a brake thermal efficiency (Eq. 41) of 21·2 per cent., a creditable result for this design.

The three cylinders were all in the same transverse plane, the three connecting-rods actuating a common crank-pin, as shown; two of the three rods were necessarily forked; plain bearings were employed throughout.

The weight of this engine, including the usual immediate accessories—carburettor, magneto, etc.—was 140 lbs., corresponding to $\frac{140}{25} = 5{\cdot}6$ lbs. per B.H.P., a high figure for an air-cooled aero engine, and due to the design involving the necessity of two massive flywheels.

The cylinders were placed at angular distances apart of 72°. Suppose cylinder A to fire; cylinder C next fires, when the crank-pin has moved through 144° measured from A; cylinder B fires when the crank-pin has described $360 + 72 = 432°$ from A; then at 720° A fires again, and the sequence is repeated. Thus impulses occur at 0°, 144°, 432°, and 720°, measured from A's axis, and the intervals between consecutive impulses are unequal, being in the ratio 1 : 2 : 2 : 1; this is, of course, a disadvantage, and involves extra flywheel mass to reduce the cyclic speed fluctuation.

Ignition is by high-tension magneto, the armature being driven at 1¼ times the crankshaft speed. Thus the magneto makes 2½ revolutions, and so gives 5 firing sparks, during each two revolutions of the crankshaft; these sparks occur at angular intervals

FIG. 14.—External view of fan-type Anzani engine.

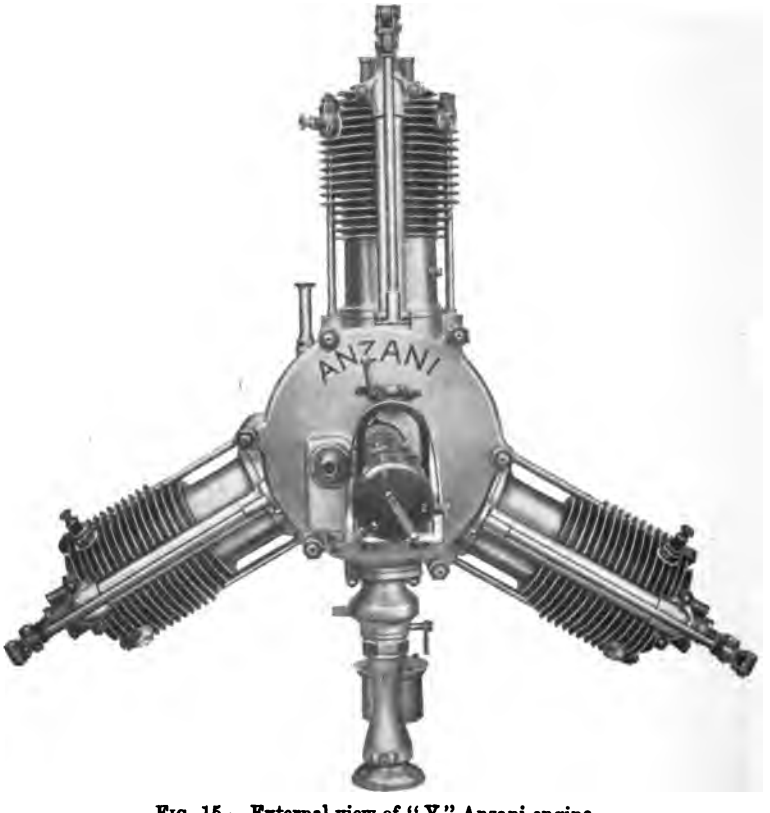

FIG. 15.—External view of "Y" Anzani engine.

of crankshaft motion of $\frac{720}{5} = 144°$; the first, second, and fourth of these are operative, and the third and fifth idle.[1]

An external view of the engine, showing the carburettor and inlet piping, is given in fig. 14.

Water-cooled fan-type Anzani aero engines were also built, one design having six cylinders grouped in three pairs.

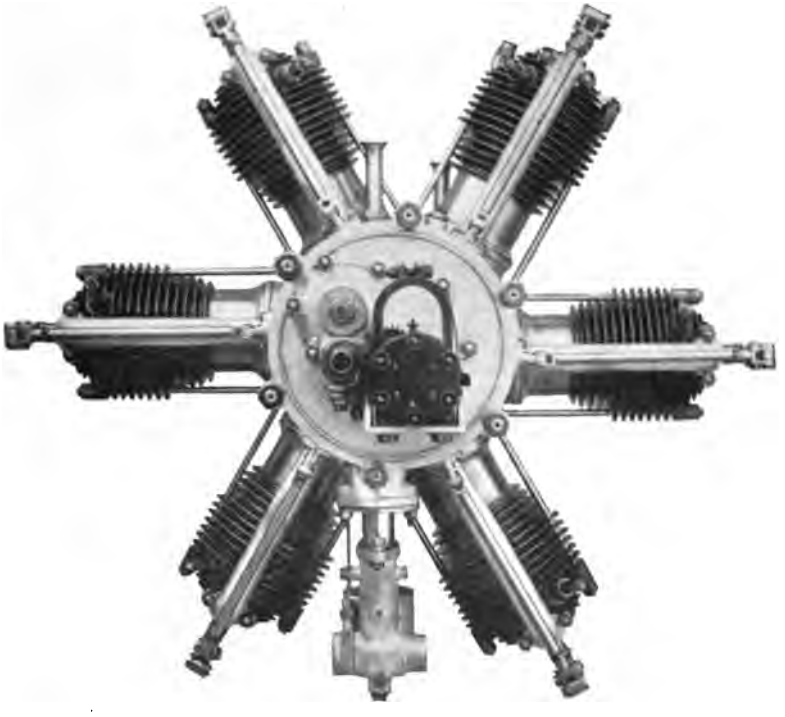

FIG. 16.—External view of six-cylinder Anzani engine.

The present design of the three-cylinder Anzani aero engine is shown externally in fig. 15; it will be seen that the cylinders are now symmetrically arranged, 120° apart, with the results that the balance is greatly improved, and the working impulses occur at equal angular intervals of 240° of crankshaft revolution. This is known as the Y-type design. By associating together two of

[1] In some cases the cylinders were placed only 60° apart; the impulses then occurred at crankshaft angles, measured from A, of 0°, 120°, and 420°, so that the intervals between impulses were more unequal, being as 1 : 2·5 : 2·5 per cycle.

these engines, the crankshaft having a double throw, with the throws at 180°, a six-cylinder radial engine is produced; such an engine is shown in external elevation in fig. 16. The two cylinder groups are slightly "staggered," the three pistons in each group acting directly upon one crank-pin.

Messrs Anzani build also engines having five radial cylinders all in one transverse plane and operating on one crank-pin, and they associate two such engines together, acting upon a double-throw 180° crankshaft, and so obtain a ten-cylindered combination. They have even gone further than this, and have duplicated the ten-cylindered arrangement, forming a twenty-cylindered, *two*-throw crank, 200 B.H.P. engine, each crank-pin being connected to two groups, each of five pistons.

An external view of a ten-cylindered engine fitted to the framework of an aeroplane is shown in fig. 17; it will be noted that the attachment is made by means of the ten crank-case bolts.

The Table hereunder gives the leading particulars of the range of air-cooled Anzani aero engines for 1914:—

PARTICULARS OF THE 1914 ANZANI AERO ENGINES, AS FURNISHED BY THE MAKERS.

Nominal H.P.	No. of cylinders.	Cylinder grouping.	Bore in inches.	Stroke in inches.	Revs. per minute.	Weight in lbs. per H.P.	List price in £ per H.P.	Lbs. of petrol per H.P. hour.	Gallons of lubricating oil per hour.	Piston speed, feet per minute.	Value of ηp in lbs. per square inch.
30	3	One	4·14	4·73	1300	4·0	5·33	·64	0·5	1025	95·7
40–45	6	Two of 3	3·54	4·73	1300	3·6	5·65	·51	0·7	1025	92·8
50–60	6	,,	4·14	4·73	1300	3·6	5·80	·52	1·0	1025	87·9
80	10	Two of 5	3·54	5·12	1250	3·0	5·4	·60	1·3	1065	101
100–110	10	,,	4·14	5·52	1200	2·9	5·1	·48	1·7	1100	93·7
125	10	,,	4·53	5·92	1200	3·7	5·4	·57	2·3	1185	86·2
200	20	Four of 5	4·14	5·52	1300	3·4	5·36	·50	2·5	1200	82·1

The nominal brake horse-power tabulated is the maximum power obtainable under normal running conditions, and thus the figures for weight and price per B.H.P. appear at their lowest values; it will be noted that the weight per B.H.P. ranges, roundly, from 3 to 4 lbs. only. The petrol consumption is low, averaging only about 0·55 lb. per B.H.P. hour, corresponding (Eq. 41) to a

brake thermal efficiency of 23·1 per cent., a very satisfactory result. The Anzani Company cite a trial of a ten-cylindered 100 B.H.P.

FIG. 17.—Ten-cylinder Anzani engine on aeroplane.

engine, made by the French military authorities in April 1913, which showed a consumption of only 0·49 lb. of petrol per B.H.P., the corresponding brake thermal efficiency being 26 per cent.; the

output was 102 B.H.P. at 1210 revolutions per minute, giving a value of ηp of 90 lbs. per square inch. These figures show a remarkable advance upon the performance of the three-cylindered fan-type engine of 1909 already described, and make it clear that the reproach of extravagance in fuel consumption can no longer be applied to the aero engine; as will be seen later, the efficiency of all the leading types has been vastly improved within the past five years.

The oil consumption is expressed in gallons per hour, and is still high as compared with that of the normal car engine; but it is to be remembered that the aero engine is required to run practically at full power continuously, and thus cannot be compared fairly with a car engine, which is rarely called upon to develop its maximum output in ordinary circumstances.

The piston speed has an average value of 1090 feet per minute, which is somewhat lower than obtains in car engine practice. A value in the neighbourhood of 1000 feet per minute is common in aero engines for the reasons: (*a*) that to keep the size and consequently also the weight of the engine low an average length of stroke of not exceeding about 5 inches is adopted; and (*b*) that structural considerations practically limit the speed of the air propellers at present used to a maximum of, roundly, 1200 revolutions per minute; hence a usual piston speed of $\frac{1200 \times 5}{6} = 1000$ feet per minute.

In a few instances engines are found in which the crankshaft revolves at about 2000 revolutions per minute while the propeller is driven from the half-speed shaft, the gear driving this being suitably strengthened to transmit the power; this involves, however, a loss in transmission of about 5 per cent. of the total power, and has not so far been much used.

Again, for bulk and weight reduction, the pistons are only about $\frac{3}{4}$ths of the cylinder bore in length, and the connecting-rods only about $3\frac{1}{2}$ cranks in length between centres; in car engines the pistons are commonly about $1\frac{1}{8}$ times the cylinder bore in length, and the connecting-rods 4 to $4\frac{1}{2}$ cranks between centres. The short pistons and connecting-rods of many aero engines involve greater obliquity of action and increased pressure intensity between piston and cylinder, which tends to more rapid wear and thus to a diminished working life; reduction of weight and bulk are,

however, as already explained, considerations of fundamental importance in this service.

In the engines of motor omnibuses, where the duty is very severe and continuous, experience has led designers to the use of pistons 1½ times the cylinder bore in length, *i.e. twice* as long as in these aero engines, and such pistons are, naturally, found to last much better in service than the shorter type used in the earlier engines; the cylinders also have a considerably longer working life.

Piston and connecting-rod lengths are points of much importance in design. Some experiments with normal car engines have shown that piston friction alone constitutes 50 per cent. of the total internal friction of the engine; increase of this friction involves more rapid wear and also greater heating of piston and cylinder. With the very thin cylinders and pistons commonly employed in aero engines, this increase in heating tends to produce distortion and consequent leakage in working.

The values of ηp in the Table of Anzani engines above are very high in view of the fact that automatic inlet valves are used throughout; these valves are, however, of large diameter, in the cylinder head, and so are more favourably placed than in the earlier fan-type design illustrated in fig. 13.

In fig. 18 is shown a longitudinal section of one of the six-cylindered, 3·54″ × 4·73″, 40–45 H.P. Anzani radial engines of which an external view appears in fig. 16.

Crankshaft.—The hollow crankshaft is of nickel steel. Forced lubrication is provided to the crank-pins through the shaft as indicated, the oil supply entering at A; this involves drilling a radial hole in the shaft at a section through which the whole engine power is transmitted, which is an undesirable practice.

Ball bearings are provided, that at the propeller end being of a combined journal and thrust type; the two main bearings are housed in bronze sleeves which also embrace the crankshaft, so that the arrangement adopted is really a combination of ball and plain bearings; it is claimed that in this way crankshaft vibrations at high speed are damped down.

There are two crank-pins placed 180° apart; on each of these the three connecting-rods of the two groups of three cylinders operate; the central web is bent as shown, so as to bring the axial planes of the two three-cylinder groups as close together as possible.

Connecting-rods.—The connecting-rods, B, are of high-tension

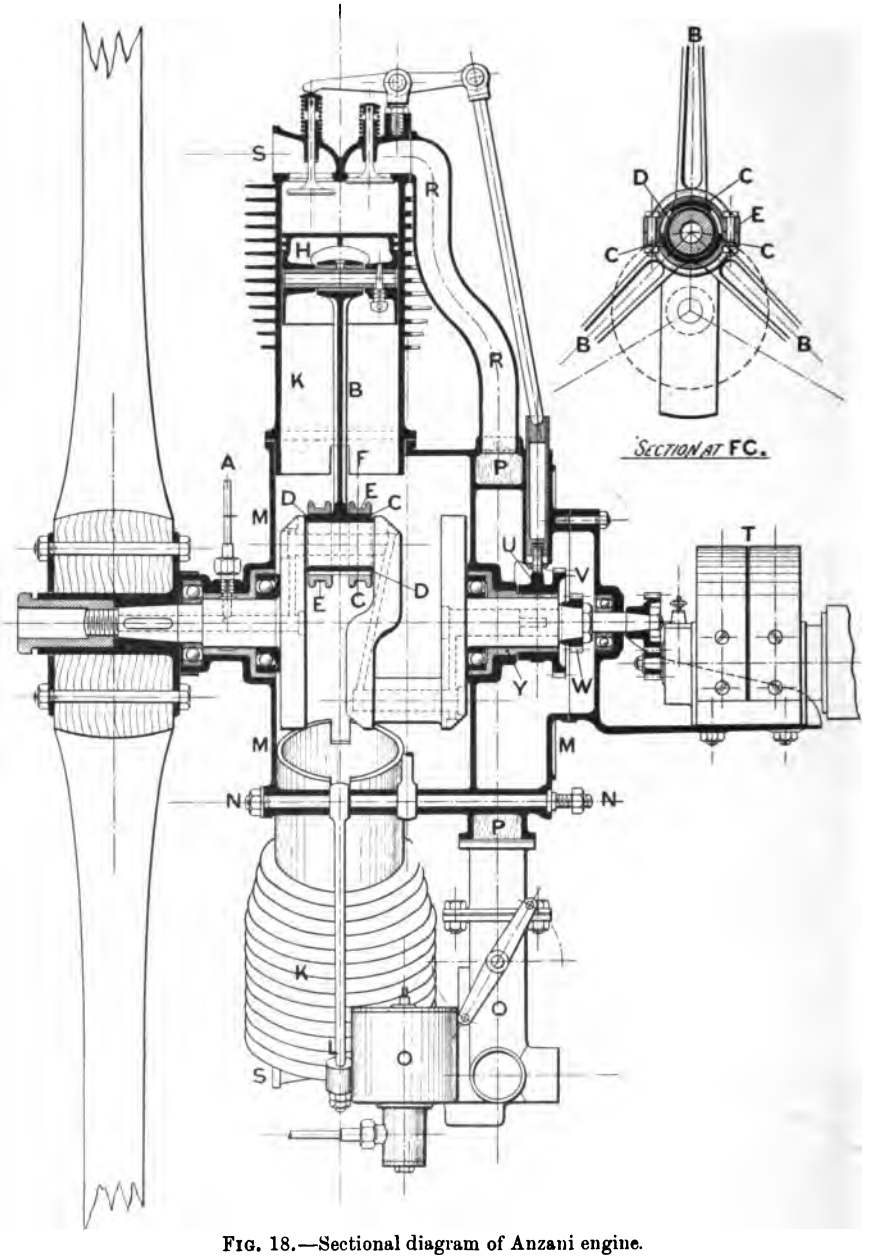

FIG. 18.—Sectional diagram of Anzani engine.

steel of H-section, and about 3½ cranks in length between centres, with a plain bronze-bushed gudgeon end. The big end formation of connecting-rods in engines having several pistons operating one crank-pin is effected in several ways, as will be seen in the cases of the "Salmson" and "Gnome" engines described later. In the Anzani engines the method adopted, shown diagrammatically in fig. 18, is to form on each connecting-rod end a "shoe," C, consisting of a portion of a hollow cylinder bounded by helical edges; the dimensions of these shoes, C C C, are so taken that they do not come into contact when two adjacent connecting-rods of the group of three connected with one crank-pin are at a minimum relative angle.

The three shoes of each group bear upon a cylindrical bronze sleeve, D, in halves, which embraces the crank-pin, and rotates relatively to it once in each crankshaft revolution; the whole is held together by a pair of collars, E E, of tough bronze.

The relative motion of the shoes and the bronze sleeve, D, is thus only that arising from the varying obliquity of the several connecting-rods during the crankshaft revolution.

Pistons.—The light flat-topped pistons, H, are of cast-iron, ground to fit the cylinder barrels closely, and provided with cooling and stiffening webs on the under side of the crowns; two cast-iron spring rings are fitted. Each piston complete with its rings is run for some time in its cylinder, by a special machine, before being set to work in the engine. The gudgeon pins are hollow nickel-steel tubes, hardened and ground, and fixed in the piston bosses by a set screw as shown.

The Cylinders.—The cylinders K K are of cast-iron, with the usual cooling ribs, these being of parabolic cross-section; the flat cylinder tops contain the conical seats of the inlet and exhaust valves. The cylinders are attached to the crank-case each by two long bolts connected to the through crank-case bolts at one end, and passing through bosses formed at the outer ends of the cylinders at the other, as shown at L in the lower part of fig. 18, thus relieving the working barrels of longitudinal stress due to the explosions.

The cylinders are slightly offset (or *desaxé*), *i.e.* their axes, produced, do not intersect that of the crankshaft; the offsetting is indicated in fig. 22, and the advantages of the practice are mentioned on p. 77 *infra*.

The Crank-case.—The aluminium crank-case MM is in halves, connected together by long bolts, N N (see also figs. 16 and 17), which are utilised to attach the engine to the aeroplane frame, as shown in fig. 17. Two "breather" tubes are fitted to the top of the crank-case; these are visible in fig. 16. A sump fitted with draining plug is provided in the bottom, from which spent and carbonised oil and sediment may be withdrawn at intervals.

As already stated, lubrication is forced to the crank-pin and main bearings, the oil entering at A. The pistons, gudgeon pins, and remaining moving parts are lubricated by the oil from the crank-pins, which is whirled off when the engine is running, and maintains an oil fog within the crank-chamber. The oil-pump, delivering at A, is formed on the valve-gear cover, and is a simple form of cam-operated plunger pump, with ball valves, the delivery stroke being caused by the cam, while the suction is provided by a helical spring. Sight-feed compressed-air gauges are fitted, in which the level of the oil may be seen, thus showing that the necessary pressure is maintained and that the lubricating system is working correctly.

The Anzani Company use the "Zenith" carburettor[1] (O, fig. 18), from which the carburetted air passes into an annular chamber, PP, surrounding the rear part of the crank-case; from this chamber pipes, R, radiate to the several inlet valves (see also figs. 16 and 17). The exhaust gases are sometimes discharged directly into the atmosphere from the exhaust orifices, S, but are also sometimes led into a "collector" pipe and silenced, as shown in fig. 19.

Ignition.—Ignition is by high-tension magneto, the machine employed being a Gibaud; it is shown at T in fig. 18, and is gear-driven from the rear end of the crankshaft.

The magneto gives two sparks per revolution of its armature; as the engine illustrated requires six firing sparks in each two crankshaft revolutions, the magneto is geared so as to run at $\frac{6}{2 \times 2}$ $= 1\frac{1}{2}$ times the crankshaft speed. In the three-cylinder Y-type engine illustrated in fig. 15, as only one-half as many firing sparks are needed, the magneto is driven at three-fourths of the crank-shaft speed. Two ignition plugs are fitted to each cylinder, thus permitting of dual ignition if desired, and also enabling the acting

[1] For description, see Clerk and Burls, *The Gas, Petrol, and Oil Engine*, vol. ii. (London: Longmans, Green & Co.).

plug to be the higher of the two in the lower cylinders, so as to lessen the risk of defective firing occurring through over-lubrication.

The Valves.—The nickel-steel valves are of the cone-seated poppet type, of large diameter, and are fitted in the flat-topped ends of the cylinders; both valve seats are in the cylinder casting, so that, in order to examine or replace a valve, the whole cylinder must be disconnected and withdrawn. The inlet valves, as already stated, are of the automatic type long abandoned in car engine

FIG. 19.—Anzani engine with exhaust "collector."

practice; the exhaust valves are cam-operated through the medium of push-rods and rockers, as shown in figs. 16, 17, 18, and 22. The cam U is in one piece with its driving pinion V, and, as shown in figs. 18 and 22, runs on a large plain bearing formed by the outer surface of the extended bronze sleeve Y; it is driven from the pinion W through two intermediate gear-wheels arranged as indicated in fig. 22; one of these intermediate gear-wheels, X, running at half crankshaft speed, operates the oil-pump and carries an extension to which a revolution counter is attached; the cams and driving gear are completely encased, as shown in the two illustrations referred to. The cam U actuates the push-rods through the

medium of case-hardened and ground steel tappet rods running in bronze guides; each tappet rod carries a hard steel roller at its inner end to reduce friction.

The cam arrangement is extremely ingenious and demands detailed explanation. It is necessary to establish first the proposition that in single-acting four-stroke radial or rotary engines in which all the pistons act upon one crank-pin there must be an *odd* number of cylinders if the working impulses are to occur at equal angular intervals of crankshaft (or cylinder) revolution. The necessity for an odd number of cylinders to each crank-pin is

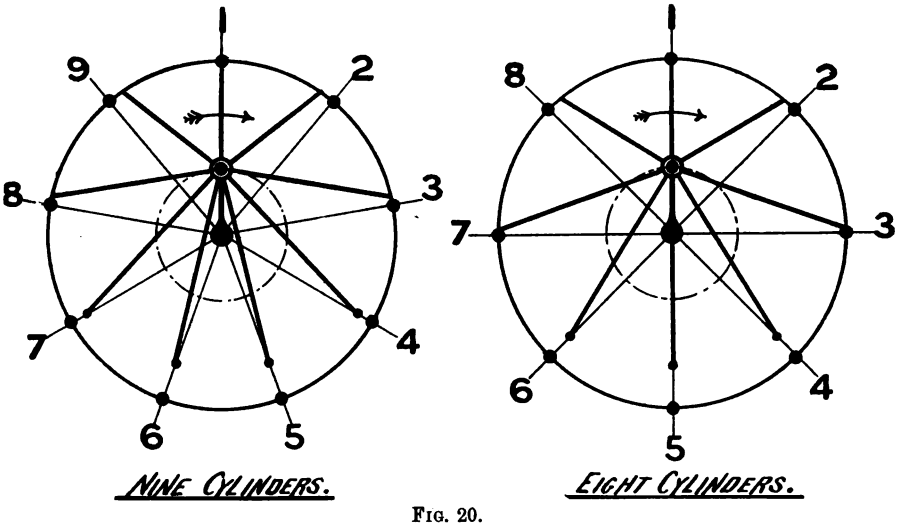

FIG. 20.

most easily realised by considering fig. 20, in which cases of radial engines having eight and nine cylinders respectively are contrasted.

Firstly, it is clear that the cylinders must not be arranged to fire *consecutively*, as in this case, being single-acting and four-stroke, *all* would fire in one revolution, with an idle revolution following; they must accordingly be set to fire *alternately*. And if they fire alternately, examination of fig. 20 will show that for impulses to occur at equal angular intervals the number of cylinders must be odd.

For, taking the case of the eight-cylindered engine, the order of firing would be 1, 3, 5, 7, 2, 4, 6, 8, 1, etc.; hence the interval between 7 and 2 would be $1\frac{1}{2}$ times the average, while that between

8 and 1 would be only one-half the average; thus the impulses would occur unsymmetrically.

On examining, however, the case of the nine-cylindered arrangement, it is clear that in two circuits we get round by equal angular steps and return to the starting cylinder 1, the order of firing being 1, 3, 5, 7, 9, 2, 4, 6, 8, 1; thus there must be an odd number of cylinders.

Aero engines provide instances of three, five, seven, and nine cylinders[1] operating on a single crank-pin; the six-cylinder Anzani just described consists of two three-cylinder engines associated together, the crankshaft having a double throw, and the throws being at 180°; so also in the ten- and twenty-cylindered engines the cylinders are in groups of five to each crank-pin.

When the cylinders of a radial or rotary engine are numerous, if each exhaust valve required its own cam, the number of cams would become very large, and the valve driving gear of considerable bulk and weight; for example, a twenty-cylindered engine would need twenty exhaust valve cams.

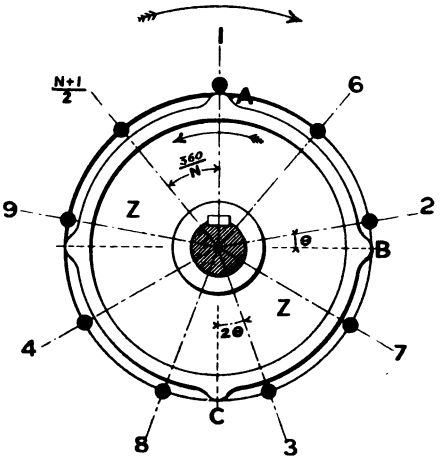

FIG. 21.

It is now to be shown, however, that if N be the number of cylinders acting upon one crank-pin, *all* the exhaust valves can be operated by a single disc revolving in the opposite direction to that of the crankshaft at $\left(\frac{1}{N-1}\right)$th of its speed, and having $\frac{N-1}{2}$ cams formed on its edge. Thus, in fig. 21, 1, 2, 3 . . . represent the several valve tappet-rollers of a group of N cylinders driving one crank-pin, and A, B, C . . . cams on the edge of the disc ZZ.

Suppose the crank-pin driven by the N cylinders to revolve in the direction of the upper arrow; let valve 1 be just operated by the cam A. The next valve to be operated is that numbered 2, and this may be done by a cam B, as shown, $\theta°$ in *advance* of 2, the cam disc revolving negatively as indicated by the lower arrow.

[1] See, however, footnote to page 171, also Appendix.

Similarly, after 2 follows 3, which can be operated by cam C, $2\theta°$ in advance of 3 in the configuration shown; and so on.

Now, the valve immediately to the *left* of No. 1 is the $\left(\frac{N+1}{2}\right)$th, and clearly this must, in due course, be operated by cam A.

So that the disc must turn negatively through an angle $\frac{360}{N}$ degrees while the crank-pin turns from 1 to $\left(\frac{N+1}{2}\right)$; the angle turned by the crank-pin may be determined thus:

From—	The crank-pin turns through—
1–2	$\frac{720}{N}$ degrees.
2–3	$2 \times \frac{720}{N}$ „
3–4	$3 \times \frac{720}{N}$ „
. . . . .	. . . . .
$\frac{N-1}{2}$ .. $\frac{N+1}{2}$	$\left(\frac{N-1}{2}\right) \times \frac{720}{N}$ degrees.

Hence the disc turns negatively through $\frac{360}{N}$ degrees while the crank-pin turns through $\left(\frac{N-1}{2}\right)\frac{720}{N}$ degrees; so that we have:

$$\frac{\text{Angular velocity of disc}}{\text{Angular velocity of crank-pin}} = \frac{-\frac{360}{N}}{\left(\frac{N-1}{2}\right)\frac{720}{N}}$$

that is: „ „ $= -\frac{1}{N-1}$ . . (44)

or the disc revolves in the opposite direction to the crank-pin and at $\left(\frac{1}{N-1}\right)$th of the speed of the crank-pin.

To determine the number of cams necessary we observe that

Valve	No. 1	requires	1 cam,
„	No. 2	„	a 2nd cam,
„	No. 3	„	a 3rd cam,
. . . .		. . . .	
„	No. $\left(\frac{N-1}{2}\right)$	„	an $\left(\frac{N-1}{2}\right)$th cam,

while the next valve, viz. No. $\left(\frac{N+1}{2}\right)$, is operated by the 1st cam. Hence the number of cams required on the edge of the disc is:

$$\frac{N-1}{2}. \quad . \quad . \quad . \quad . \quad . \quad (45)$$

It seems necessary to show that the number of cams thus determined will correctly operate all the exhaust valves, which may be done as follows:—

Referring to fig. 21, as the number of cams on the disc is $\frac{N-1}{2}$, the angle between consecutive cams is $\frac{360}{\frac{N-1}{2}} = \frac{720}{N-1}$ degrees; hence, when cam A has moved round negatively through $\frac{360}{N}$ degrees and is operating the $\left(\frac{N+1}{2}\right)$th valve, cam B is $\frac{720}{N-1}$ degrees away, clockwise, and must next operate the valve numbered "6" in the figure.

Now "6" is $2 \times \frac{360}{N} = \frac{720}{N}$ degrees away clockwise from the $\left(\frac{N+1}{2}\right)$th valve; hence cam B is $\frac{720}{N-1} - \frac{720}{N} = \frac{720}{(N-1)N}$ degrees away *clockwise* from valve "6"; when, therefore, the crank-pin has turned through the angle between the $\left(\frac{N+1}{2}\right)$th valve and "6," *i.e.* through $\frac{720}{N}$ degrees clockwise, the cam disc, turning negatively at $\left(\frac{1}{N-1}\right)$th the rate of the crank-pin, will have moved cam B negatively through $\frac{1}{N-1}\,\frac{720}{N}$ degrees, which is precisely the amount necessary to cause it to operate valve "6." As this argument applies to each valve in succession, the operation of the cams will be throughout in step with the requirements of each of the N valves.

Of course, if the inlet valves are also mechanically operated, a further set of $\frac{N-1}{2}$ cams on a second disc, or, at any rate, in a different plane from those operating the exhaust valves, will be necessary to operate them, and in this case the total number of cams to be provided will be $(N-1)$.

There are already cases of aero engines whose 3, 5, 7, and 9 cylinders act on one crank-pin; the following short table shows the disc speed and number of cams necessary to operate *each set* of valves:—

FROM EQS. (44) AND (45).

Number of cylinders on one crank-pin.	N =	Ratio of disc speed to crankshaft speed.	Number of cams on disc to operate one set of the valves.
3	3	1 : 2	1
5	5	1 : 4	2
7	7	1 : 6	3
9	9	1 : 8	4

This very ingenious system of operating the exhaust valves is adopted in all the 1914 Anzani aero engines; in the six-cylindered engine illustrated in figs. 16 and 18, which is formed, as already

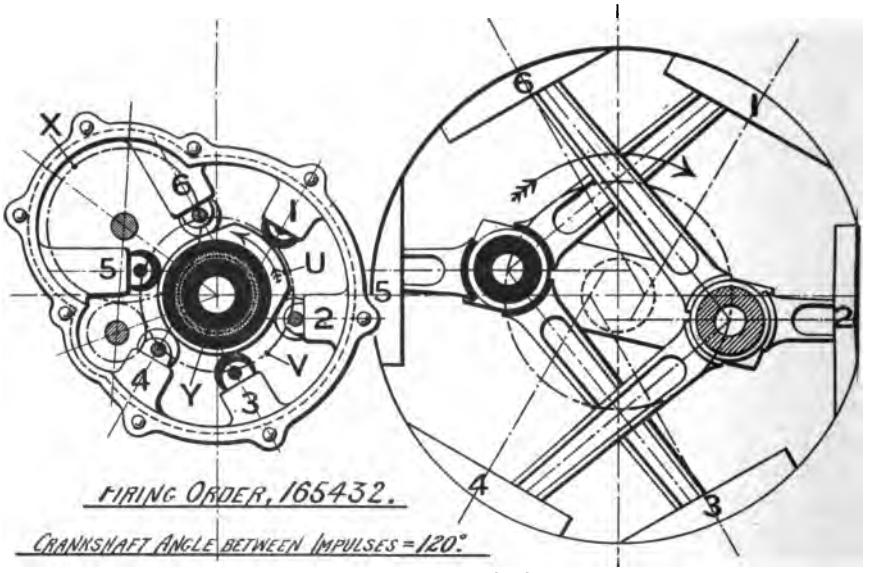

FIG. 22.—Valve operation of six-cylinder Anzani engine.

explained, by associating together two three-cylinder groups with their crank-pins at 180°, a disc with only *one* cam suffices to operate all six exhaust valves. The arrangement is diagrammatically shown in fig. 22; the six tappet-rods are all in one plane with

the cam disc U; the disc revolves in the opposite direction to that of the crankshaft and at one-half its revolution speed; the cam thus alternately operates a valve of the one and the other group of cylinders at intervals of 60° of disc rotation, *i.e.* of 120° of crankshaft rotation, as the engine requires.

The ten-cylindered Anzani engines are formed by associating two groups of five each, with crank-pins at 180°; in this case there is not room for ten tappet-rods to lie all in the same transverse plane; they are accordingly arranged five each in two transverse planes at a short distance apart, and are all driven by one "disc" made in one piece with its driving pinion, and provided with a total of four cams in two planes, two being in each plane, mutually at right angles, as clearly shown in fig. 23. This disc is, of course, driven in the opposite direction to that of the crankshaft, and at one-fourth of its revolution speed.

FIG. 23.—Cams of ten-cylinder Anzani engine.

The 200 H.P. Anzani Engine.—Reference has already been made to the 200 H.P. Anzani aero engine as formed by associating together four five-cylindered groups, the external appearance produced being as exhibited in fig. 24.

The first *two* groups each of five cylinders act on *one* crank-pin of the *two*-throw crankshaft, the second two groups similarly acting on the second crank-pin; the two crank-pins are not exactly opposite, but include an angle of 162°, an arrangement that is claimed to reduce vibration in running; the engine is carefully balanced so as to run with great smoothness.

The exhaust valves of the first two groups of cylinders are operated from the front of the engine, those of the second two groups from the back; each pair of groups by a disc with four cams—as in the ten-cylindered engines—running in the opposite direction to the crankshaft and at one-fourth of its speed.

There are two annular mixture chambers (as PP, fig. 18), one at the front and the other at the back of the engine, each being independently supplied by its own "Zenith" carburettor; the controls of the two carburettors may be connected together if desired.

Ignition is effected by two high-tension Gibaud synchronised magnetos, shown clearly in fig. 24; as each must furnish ten sparks

in every two crankshaft revolutions, or five per revolution, each is driven at $\frac{5}{2}$, *i.e.* two and a half times the crankshaft speed. Twenty working impulses occur during every two crankshaft revolutions, or ten per revolution; the interval between consecutive impulses is

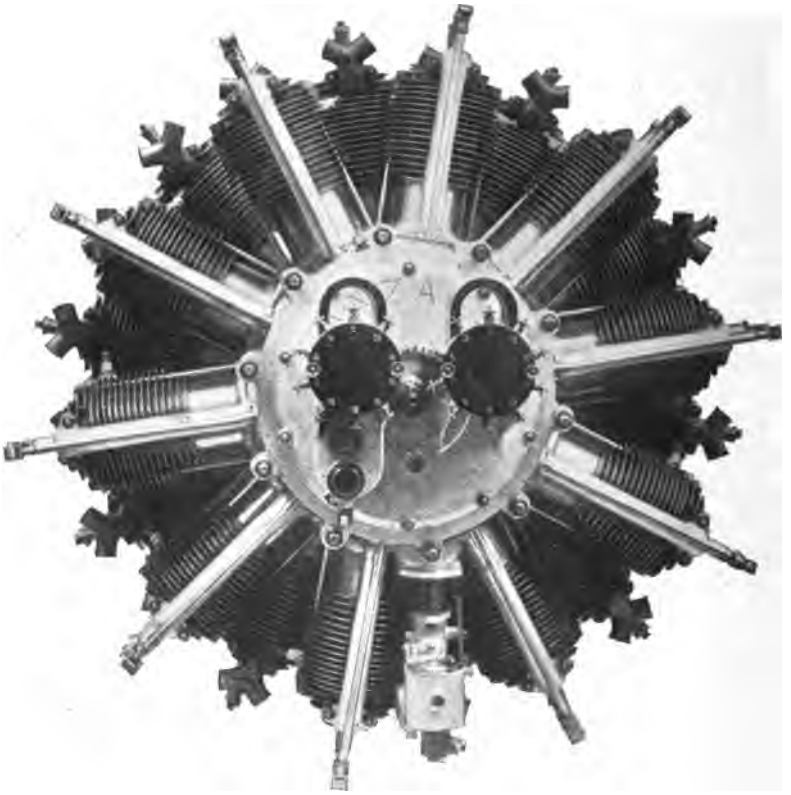

FIG. 24.—Twenty-cylindered 200 H.P. Anzani radial engine.

thus only $\frac{360}{10} = 36°$ of crankshaft angle; hence at any instant five of the cylinders are always working, and the motion is consequently very uniform.

It may be noted that when running at 1200 revolutions per minute there are 200 explosions, *i.e.* working impulses, *per second* acting on the crankshaft.

The lubricating system being also in duplicate, it is seen that this twenty-cylindered engine is in effect two separate ten-cylinder

units, each of which is capable of running independently of the other.

The remaining details of construction are generally similar to those of the six-cylinder design already described.

Offsetting of the Cylinders.—In all the Anzani aero engines the cylinders are slightly "offset" or "desaxé," *i.e.* the cylinder axis produced does not pass through that of the crankshaft. The

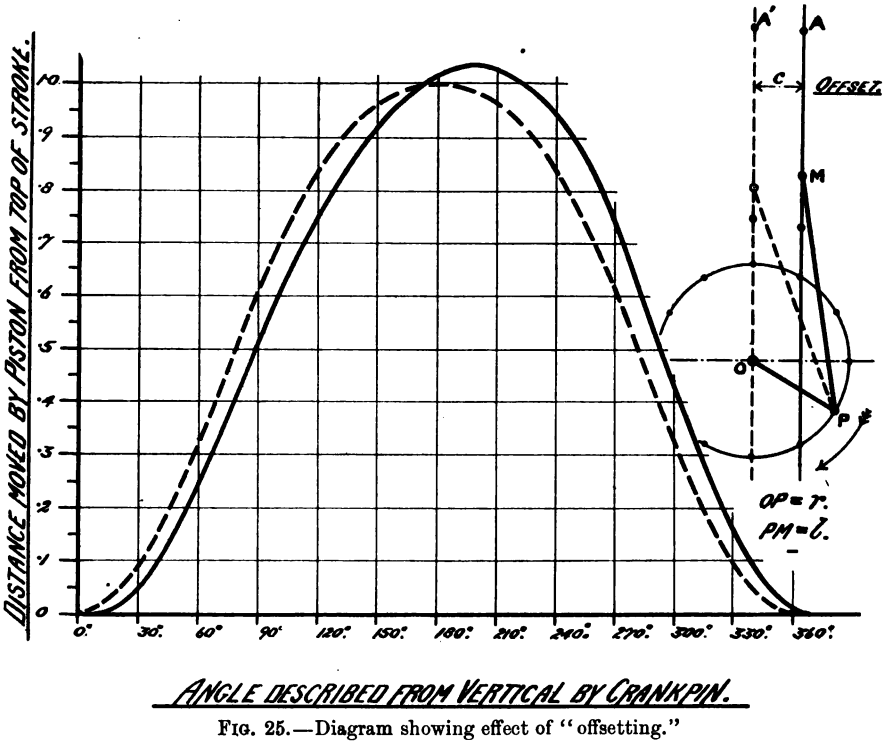

FIG. 25.—Diagram showing effect of "offsetting."

principal object of this practice is to diminish the obliquity of the connecting-rod to the piston axis during the working stroke, and thus reduce piston friction and consequent heating and wear; incidentally also it causes the piston to move more slowly at the commencement of the working stroke, and so tends to permit the explosions to occur more nearly at constant volume, which is advantageous. Offsetting the cylinders of petrol engines has been frequently adopted by designers in recent years.

The difference in the motion of the piston when the cylinder is offset from that in the more usual arrangement is exhibited in

fig. 25; the usual arrangement is shown in dotted, and the offset in full, lines. If C denote the amount of the offset, then the stroke of the piston is slightly increased by offsetting, and when C is small, as is usually the case, is expressed very closely by:

$$\text{Stroke of offset piston} = 2r\left(1 + \frac{1}{2}\frac{c^2}{l^2 - r^2}\right), \quad . \quad . \quad (46)$$

where r and l denote the crank and connecting-rod lengths respectively.

Although the stroke is thus a little greater, the engine may actually be made a little *shorter*, as will be seen from the figure, A and A′ denoting the positions of the piston when at the top of its stroke in the two cases.

The curves show the relation between piston movement and angular motion of the crank-pin, the full line referring to the offset, and the dotted to the usual, arrangement. It will be noted that during the "out"-strokes, *i.e.* suction and working, the offset piston is behind the other; for example, when the crank-pin has described 90° from its topmost position the offset piston, in the case assumed, has described just over 50 per cent. of its stroke, whereas in the ordinary case—as shown by the dotted curve—it would have described just over 60 per cent.; the difference is more marked at the commencement of the down-stroke, and, as already stated, may confer a practical advantage in running.

Having now described a typical example of an air-cooled radial aero engine, some account will next be given of a successful type of water-cooled radial aero engine.

The "Salmson" Aero Engine.—The "Salmson" aero engines, invented jointly by MM. Canton and Unné, are manufactured on the Continent by the Société Anonyme des Moteurs "Salmson," of Billancourt, Seine, and in Great Britain by the Dudbridge Iron Works, Ltd., of Stroud, Glos.

An external view of the nine-cylindered water-cooled radial Salmson aero engine appears in fig. 26; the nine cylinders are symmetrically disposed around the crankshaft, and the nine connecting-rods all operate upon one crank-pin in the manner described below.

The Salmson engines are also arranged with the cylinder axis in a horizontal plane and the crankshaft axis vertical; in such cases the propeller is driven by means of bevel gearing. This

horizontal disposition is often adopted in dirigibles, and occasionally in large sea-planes; it lends itself conveniently to the general arrangement of dirigibles, diminishes view obstruction and head resistance, and furnishes a convenient means of providing a speed reduction from the engine to the propeller. The usual reduction of speed in these engines is in the ratio of 9 : 5, so that the propeller may be of large diameter and comparatively low

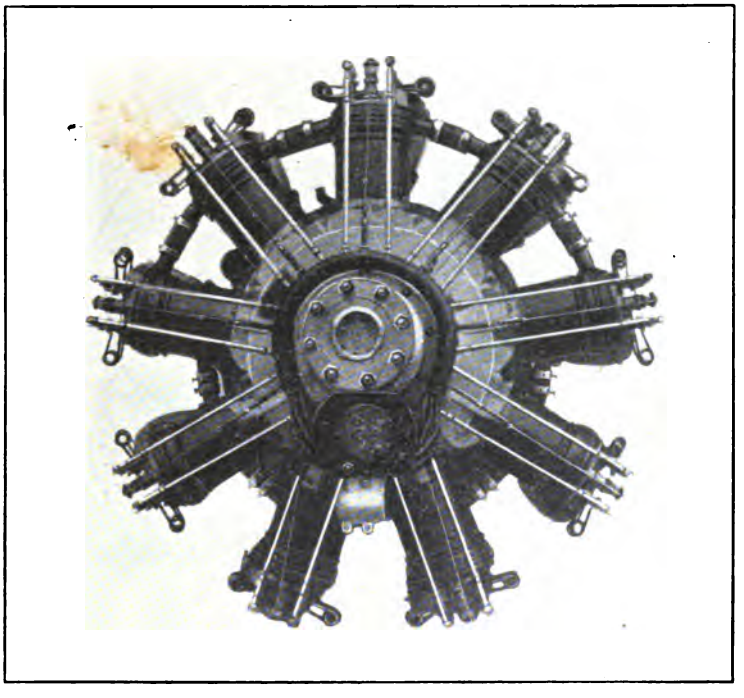

FIG. 26.—110 H.P. Salmson engine.

revolution speed, which is a desideratum in large air-craft. An external view of a horizontal Salmson engine appears in fig. 27. It will be seen that the bevel reduction gearing is completely encased, and that the engine exhaust is silenced.

A diagrammatic section through one cylinder of a Salmson engine, showing also the crankshaft and connecting-rod attachment, is given in fig. 28.

Crankshaft.—The stout hollow steel crankshaft has a single throw, and is in two pieces, A and B, the crank-pin being in one with the left-hand piece A; connection with B is made by the

coned, keyed, and screwed end of the crank-pin, and the nut C; this separation of the crankshaft is necessary to enable the cage FF carrying the big-end pins of the several connecting-rods to be mounted on the crank-pin.

Lubrication is provided to the connecting-rod big-end pins through the crankshaft as indicated; the oil enters at the right-hand end of the shaft through an axial hole D.

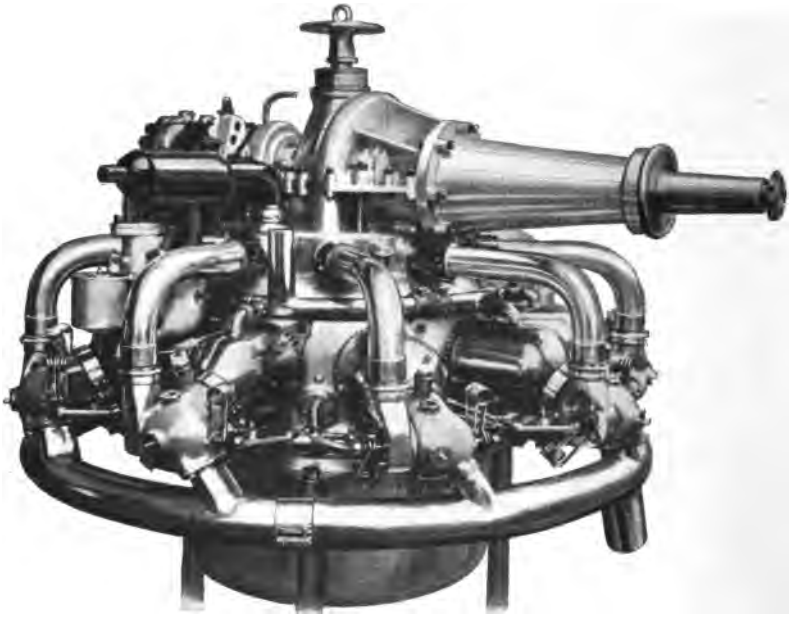

FIG. 27.—Horizontal Salmson engine.

The crankshaft is carried in large ball-bearings; no white-metal bearing is used in any part of the Salmson engines.

Connecting-rods.—The seven, or nine, steel connecting-rods EE of H-section are machined all over and fitted at each end with bronze eyes; the distance between the axes of these eyed ends is about 3¼ crank-lengths.

The method of connecting up the several rods to the crank-pin is one of the most characteristic features in the Salmson design, and is as follows:—Referring to figs. 28 and 29, a steel cage or connecting-rod carrier FF, borne on the crank-pin by the ball bearings G and H, is fitted with the symmetrically disposed seven,

or nine, hollow steel big-end pins J, by which the connecting-rods are severally attached.

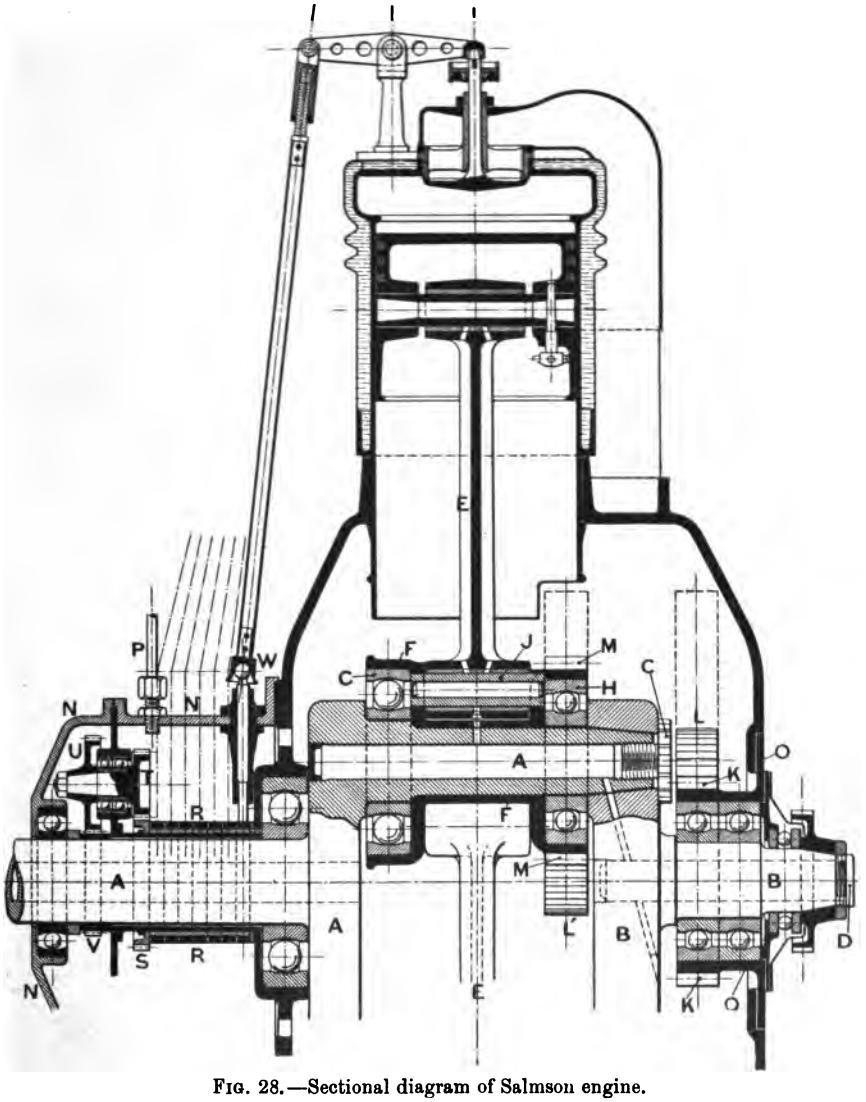

FIG. 28.—Sectional diagram of Salmson engine.

If this were all, the resulting motion would be irregular and undefined, as the position of the carrier FF on the crank-pin would not be definitely assignable at any moment; some means is therefore necessary of regulating the position of the carrier FF.

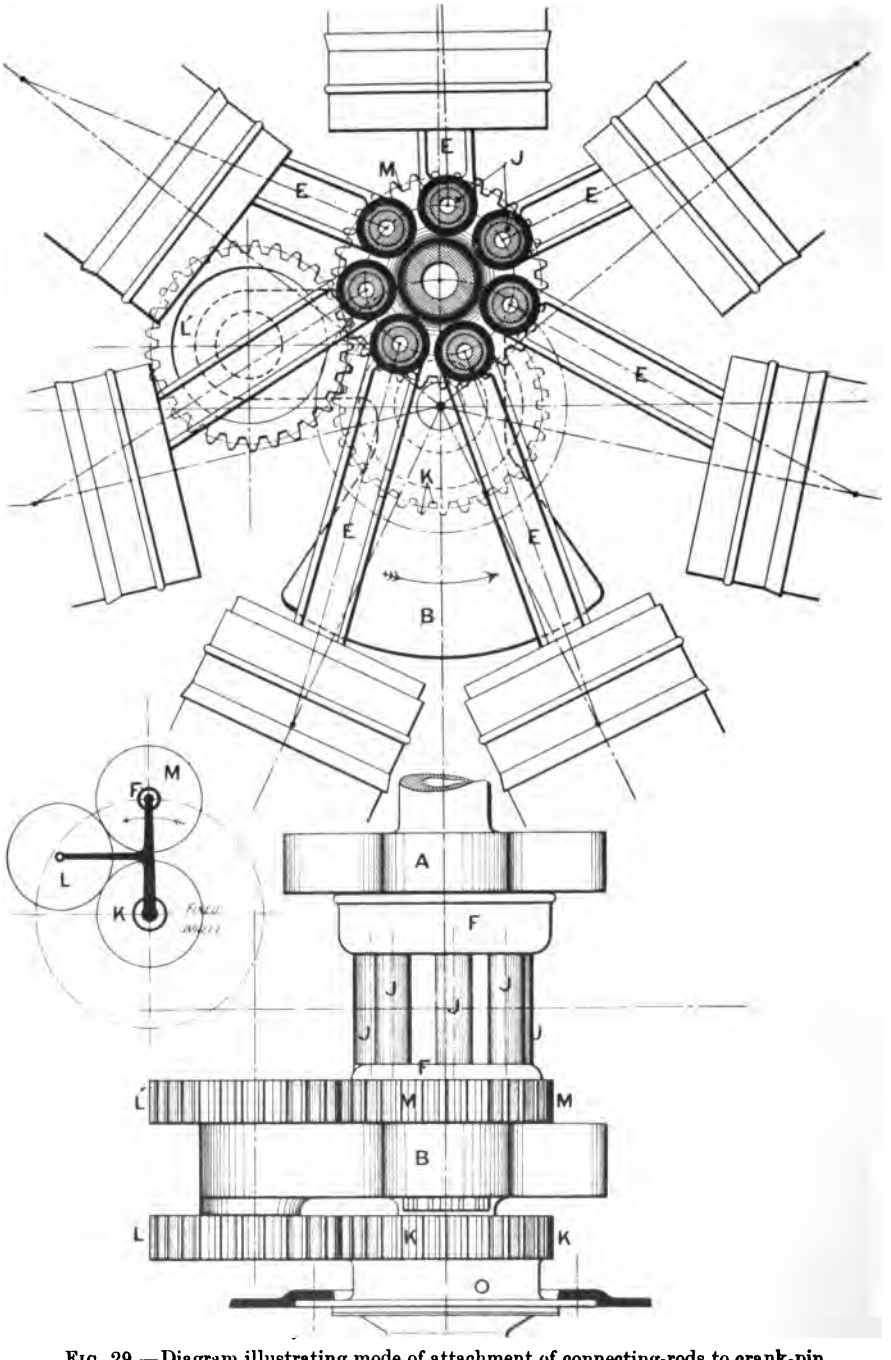

FIG. 29.—Diagram illustrating mode of attachment of connecting-rods to crank-pin in Salmson engine.

Consider first the usual case of a single connecting-rod acting upon a crank-pin as indicated in fig. 30; the big end, to which the carrier FF here corresponds, does not rotate during the running of the engine, but, being a part of, and hence rigidly attached to, the connecting-rod, oscillates through the angle θ per revolution of the crank-pin, due to the finite length of the connecting-rod. As the length of the connecting-rod in relation to the

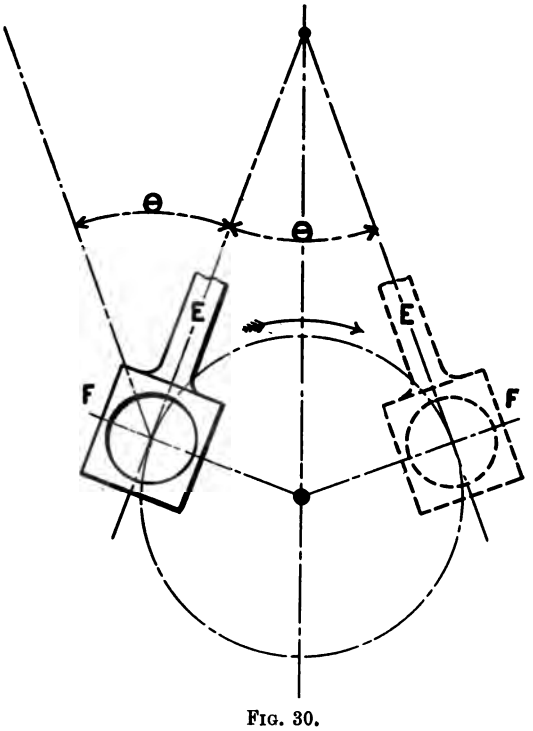

FIG. 30.

crank-length is increased, θ becomes less and less, and in the limit, for an infinitely long connecting-rod, the big end does not oscillate at all.

In the Salmson engines it is ingeniously contrived that the cage FF shall not oscillate at all by means of the epicyclic train KLL′M (figs. 28 and 29), of which K is rigidly fixed to the crank-*case* so as to be incapable of rotation, while the pair of equal wheels L L′ are carried on a spindle borne in an extension of the crank-cheek, and consequently revolve with the crankshaft, and lastly M is a wheel, exactly equal to K, formed in one piece

with the cage FF; the gear-wheels K and L and L′ and M are constantly enmeshed.

The arrangement of this epicyclic train will be readily appreciated from the small diagram on the lower left of fig. 29; normally K is at rest, while the crank carrying L and M revolves around the crankshaft axis in the direction of the arrow.

Assume, firstly, for simplicity, that K, L, and M are all equal; when the crankshaft makes $+1$ revolution in the direction of the arrow, it is required to determine the number of revolutions performed by L and M respectively.

This is done by the artifice of supposing that to the whole system a common rotation of -1 revolution is communicated; in this case it is clear that:—

1. The crankshaft makes $+1-1=0$ revolutions, *i.e.* is brought to rest.

2. The normally fixed pinion K makes $0-1=-1$ revolutions, *i.e.* turns once round in a clockwise direction.

3. The pinion L, now turning on a fixed axis, and enmeshed with K, makes $+1$ revolution.

4. The pinion M, now turning also on a fixed axis, and enmeshed with L, makes -1 revolution.

These relative revolution rates are constant, and remain unchanged when any rotation common to the whole system is imposed upon it. Let, then, a common rotation $+1$ be imposed; we thus restore the system to its actual working condition, and see that:—

1. The crankshaft makes $0+1=1$ revolution in the direction of the arrow.

2. The pinion K makes $-1+1=0$ revolutions, *i.e.* remains fixed.

3. The pinion L makes $+1+1=2$ revolutions in the same direction as the arrow.

4. The pinion M makes $-1+1=0$ revolutions, and therefore does not rotate, though its centre is carried round in the circle described by the centre of the crank-pin.

Hence the gearing provides that the cage FF, carrying the seven, or nine, big-end pins, does not rotate at all.

Actually the pinions L are smaller than the necessarily equal pinions K and M; this does not affect the relation of K and M, but the pinions L make $(N+1)$ revolutions per revolution of the crankshaft, where $\frac{1}{N}=\frac{L}{K}=\frac{L'}{M}$.

The effect of the non-rotation of the cage FF and pins J upon the motion of the pistons is rendered clear by fig. 31. Let J be any one of the big-end pins; then the line JA remains always parallel to the cylinder axis EB. Through J draw JJ′ parallel to

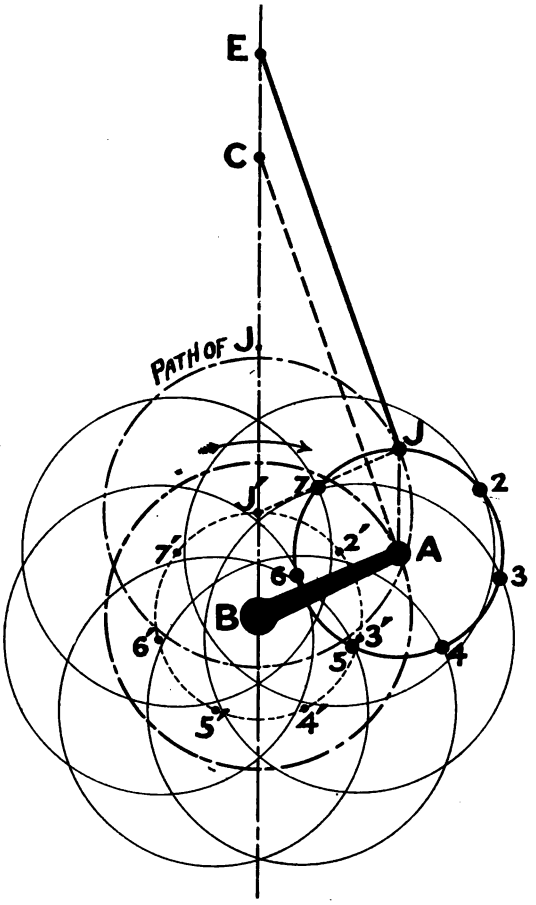

FIG. 31.

AB, and meeting EB in J′; then, as JA is always parallel to EB, J′B is constant and J′J is equal to BA; that is, J describes a circle of radius equal to AB about the fixed centre J′. A similar result obtains for the remaining pins 2, 3, 4, . . . 7, these describing circles about the fixed centres 2′, 3′, 4′, . . . 7′ respectively; all these circular paths are of radius equal to that of the crank-throw BA, and their centres all lie on a circle of radius equal to AJ, *i.e.*

to that of the circle on which the centres of the seven big-end pins lie.

Through A draw AC parallel to JE; it is evident that in the usual arrangement, *i.e.* where the big end embraces the crank-pin, AC would be the position of the connecting-rod in the configuration of fig. 31. Hence the effect of carrying the big-end pins J in the cage FF is that, for the same ratio of connecting-rod to crank, the piston is further from the crankshaft centre by the distance CE, *i.e.* AJ. Thus the over-all diameter of the engine is increased by twice AJ, *i.e.* by the diameter of the circle round which the big-end pins are ranged due to this mode of attaching the connecting-rods to the crank-pin; the bulk and hence the weight of the engine must, in consequence, be somewhat increased.

The forces set up in the epicyclic train in restraining the cage FF are found to be best distributed by setting the pins JJ a little backward (about 6° in the seven-cylinder design) from the direction of the crankshaft rotation, as will be observed in fig. 29.

Pistons.—The pistons (see fig. 28) are of cast-iron, flat-topped, and fitted each with three cast-iron spring rings. Much difference of opinion still exists as to the suitability of steel for the pistons of petrol engines; though they may be made somewhat lighter when of steel, it is indisputable that steel pistons, particularly when used in steel cylinders, have occasioned considerable trouble by "seizing," and in several cases constructors, after trying steel pistons, have reverted to the use of cast-iron. The gudgeon pins are hollow tubes of a tungsten steel, fixed in the piston bosses by a set screw as indicated in fig. 28.

Cylinders.—The cylinders are of nickel steel, machined all over, and produced from solid ingots; the finished thickness of the working barrels is but 0·08 inch (2 mm.); the flat-topped combustion chambers carry bosses into which the casings of the inlet and exhaust valves are screwed, as indicated in fig. 28. The water-jackets are of spun copper, brazed to the cylinders, and corrugated to permit the working barrels to expand freely. To ensure efficient cooling of all the cylinders in water-jacketed engines of radial type has proved a somewhat troublesome problem; the arrangement adopted in the vertical Salmson engines is indicated in fig. 32.

A centrifugal pump, gear-driven at about the engine speed from the rear end of the crankshaft, delivers the cooling water to the lowest point of the two bottom cylinders; issuing from the highest

points of these, it enters the next pair at the inner ends of their jackets, and leaves at their outer ends, and so on alternately; the course of the circulation is clearly shown in fig. 32. From the top of the uppermost cylinder the heated water passes to the radiator; from the bottom of the radiator it returns, cooled, to the circulating pump.

The water pipes are of $1\frac{3}{16}''$ bore; a small pipe A (fig. 32) connects the pump suction with the rising pipe from the topmost cylinder, to facilitate the escape of any air or steam which may exist or form in the pipe system and would otherwise prejudice

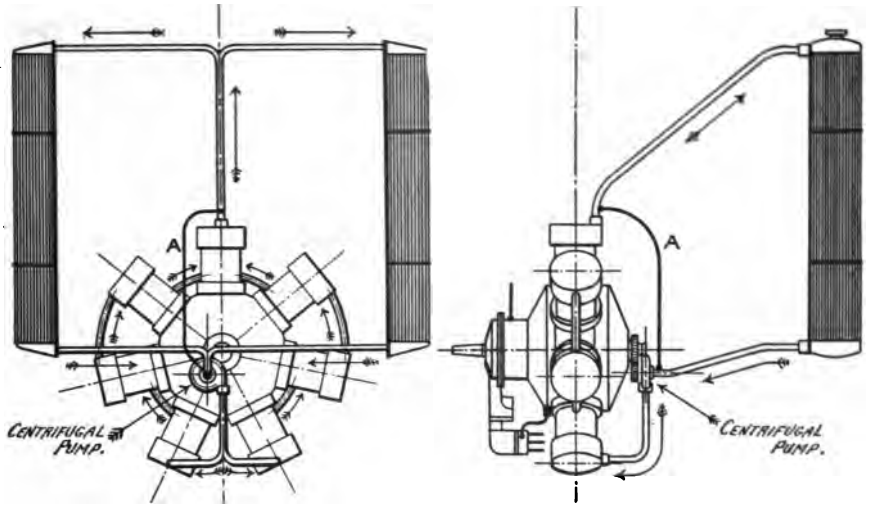

FIG. 32.—Water-cooling system of Salmson engines.

the performance of the pump; the pipe connections are made by rubber unions.

The cooling surface necessary depends to some extent upon the type of radiator and the normal speed of the aeroplane. For ordinary cases, and with radiators composed of flattened tubes pitched $\frac{7}{16}''$ apart, about 55 square feet of surface suffices for a seven-cylindered 90 B.H.P. engine, while for the nine-cylindered 130 B.H.P. type about 90 square feet is usually provided.

In cases where the propeller is placed behind the radiator it is necessary to increase these cooling areas by about 16 square feet. If the engine be situated above the radiator, a small reservoir, of about half a gallon capacity, is fitted at the point where the heated water leaves the engine.

The Crank-case.—The aluminium crank-case is in halves, between which the cylinders are securely clamped, as indicated in fig. 28; the cam-box NN on the left is detachable from the crank-case, while on the right the flanged steel cylinder O, in one piece with the fixed pinion K, forms also the housing of a double-row ball bearing supporting the inner end of the crankshaft.

The lubricating system is shown diagrammatically in fig. 33. A double pump is fitted below the cam-box; the one pump draws oil from the crank-case sump, and delivers it to an external oil reservoir placed about 15 inches at least above the crankshaft

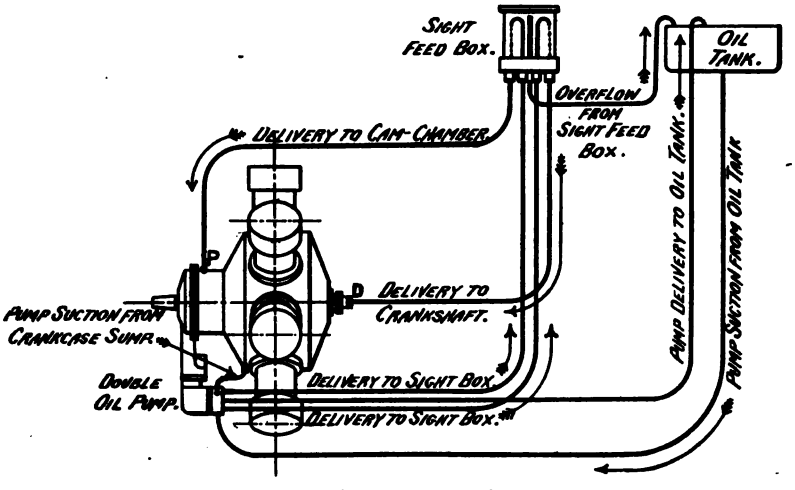

FIG. 33.—Lubricating system of Salmson engines.

centre; here it becomes cooled. The other pump draws from this oil reservoir through a filtering screen composed of two sheets of fine wire gauze, and discharges into a sight feed box, whence it is delivered to the crankshaft through the end D, and to the cam-box through the pipe P (see also fig. 28). The oil entering at D passes through ducts in the shaft, crank-cheek, and crank-pin to the several big-end pins; the exudation is whirled off and assists in lubricating the pistons and gudgeons.

Through P lubricant is supplied to the cam-box. The oil thrown on the inner surface of the crank-case drains into the sump and is returned to the oil reservoir, as above mentioned; the several cylinders project well into the crank-chamber, and thus prevent those below the horizontal from becoming flooded with

oil. Any good motor-car engine type of oil is suitable for lubrication.

Carburation.—The carburetted mixture is supplied by two "Zenith" carburettors fitted with choke-tubes to a design of the Salmson Co. These carburettors are placed on the horizontal axis of the engine and deliver through hot-water jacketed branches into an annular mixing chamber, whence induction pipes proceed to the several cylinders. Heating the mixture before it enters the annular chamber is beneficial to the extent of furnishing the latent heat necessary to just vaporise any suspended petrol spray; any heat in excess of this attenuates the charge by causing its expansion, and is thus undesirable; mixture-pipe jacketing is particularly useful at great altitudes, where very low temperatures prevail.

The service petrol tank is placed about one foot higher than the float-boxes of the carburettors, and is connected up by as simple a piping arrangement as possible; unions in the petrol pipes may be made with lengths of "Duritt." Very fine gauze filters are fitted in the petrol tank, and the petrol itself is strained through chamois leather before use.

Exhaust silencers may be fitted if required; some experiments with a nine-cylindered 130 B.H.P. engine showed that the addition of an exhaust silencing apparatus reduced the output by only about 4 B.H.P. The silencing of aero engines is desirable from military considerations, and the reduced noise and deflection of the exhaust gases add materially to the comfort of the pilot.

Ignition.—In the seven-cylindered Salmson engines, ignition is effected by a Bosch high-tension magneto of ordinary type giving two sparks per revolution; as the engine requires seven sparks per two crankshaft revolutions, the magneto armature is driven at $\frac{7}{2 \times 2} = 1\frac{3}{4}$ times the crankshaft speed; the order of firing is of course 1, 3, 5, 7, 2, 4, 6.

In the nine-cylindered engines the igniting magneto is of the so-called Bosch "shield" type, giving four sparks per revolution. Ordinarily the magneto armature revolves between the pole-pieces of the permanent magnets, and two sparks per revolution are then obtained; in the "shield" magneto, however, the armature is *fixed*, and round this fixed armature and between it and the magnet pole-pieces a cylindrical segmental iron sleeve rotates. In each revolution of this segmental sleeve the current intensity attains a

maximum four times, and being then interrupted provides accordingly four firing sparks per revolution. As the engine requires nine sparks per two crankshaft revolutions, and the magneto gives eight sparks per two sleeve revolutions, it is clear that the magneto must be driven at $\frac{8}{9}$ths of the crankshaft speed.

The Salmson Co. are now (1914) arranging to fit two magnetos to all their aero engines, each magneto supplying its own set of sparking plugs, so that there are two plugs in each cylinder, and the ignition is therefore "double"; the principal object of this duplication is to have a reserve ignition in the event of a magneto failing.

Valves.—The nickel steel valves, both mechanically operated, are of the cone-seated poppet type, nearly 0·5 of the cylinder bore in throat diameter, and are located—as usual with aero engines—in the flat-topped cylinder heads, partly to leave the working barrels plain cylinders and so reduce the risk of irregular heat distortion during working, and partly to improve volumetric efficiency, as the whole valve circumference is available for inflow and outflow of gas.

Each valve is contained in its own seating casting, which screws into a boss in the cylinder head, as shown in fig. 28; when practicable, it is preferable to seat the exhaust valve in the cylinder head itself, so that the jacket-cooling water may be as near the valve seat, and valve, as possible; the exhaust valves of aero engines usually run red-hot and are a fruitful source of trouble.

The helical valve springs are fitted in the unusual manner shown in figs. 26 and 27; an advantage of the arrangement is that the springs remain cool during working, and thus their temper remains unaffected.

Each valve is cam-operated through a tappet, push-rod, and rocker, as indicated in fig. 28; the seven (or nine) cams RR are keyed on a sleeve formed in one piece with the gear-wheel S, through which they are driven at half the crankshaft speed by the train of gearing V, U, and T; it will be noted that the lower ends of the push-rods are belled and fit over the ball-ends of the tappet-rods as shown at W.

A special feature of the Salmson engines consists in the operation of both valves of each cylinder by one cam; the arrangement is diagrammatically shown in fig. 34; the small rocking lever X, pivoted at Y, bears at its ends rollers Z Z through which the cam Q in the course of its rotation lifts the tappets W W′ in succession, and so operates the exhaust and inlet valves respectively.

This method of operation obviously involves equal periods of admission and exhaust; in normal car engines experience has led to the following as the average valve setting:—

INLETS . .	Open 12° late.	Close 20° late.
EXHAUSTS . .	„ 45° *early*.	„ 6° „

So that from the beginning to the end of opening the crankshaft describes about 188° of angle in the case of the inlet valves, and 231° in that of the exhausts.

In the Salmson engines the setting is so arranged that the exhaust closes and the inlet opens at the outer dead centre, while the exhaust opens and inlet closes nearly at the inner dead centre; this tends to increase of exhaust back pressure and diminished suction period, and so to reduced volumetric efficiency. The valves are, however, large, and the engine speed is not high, so that the effect is probably of but little importance.

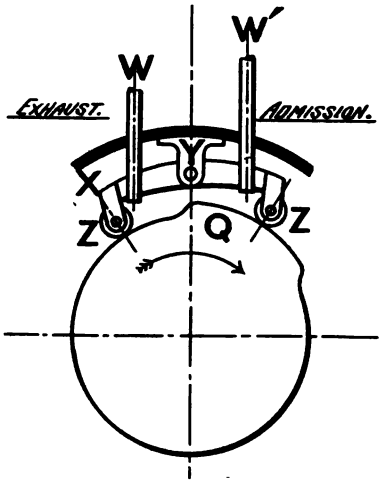

FIG. 34.

General.—The range of Salmson aero engines manufactured by the Dudbridge Co. in 1914 comprised six types, the leading particulars of which are given in the table below. The general disposition of the seven- and nine-cylindered types has already been described. The fourteen-cylindered 200 B.H.P. design consists of two groups each of seven cylinders acting upon a *one-throw* crank, the junction of the crankshaft being made in the common crank-pin between the two big-end pin cages.

This fourteen-cylindered engine is noteworthy as it acts upon a *six*-stroke and not upon a four-stroke cycle, the valve cams being in consequence specially arranged, and the cam-shaft driven at *one-third*, and not one-half, of the crankshaft speed.

This is done in order to obtain working impulses at equal angular intervals of crankshaft revolution with two seven-cylindered groups operating all on one extended crank-pin; the necessity of this, and the order of firing, are rendered clear by

LEADING PARTICULARS OF THE 1914 "SALMSON" AERO ENGINES, AS MANUFACTURED BY THE DUDBRIDGE IRON WORKS, LTD., STROUD, GLOS., UNDER THE "SALMSON" PATENTS.

Type.	Nominal B.H.P.	No. of cylinders.	Cylinder grouping.	Bore in inches.	Stroke in inches.	Normal speed in r.p.m.	List price in £ per B.H.P.	Lbs. of petrol per B.H.P. hour.	Gallons of oil per hour.	Piston speed in feet per minute.	Value of ηp in lbs. per square inch.
M. 7	90	7	One of 7	4·73	5·52	1250	7·22	0·53	0·3	1150	84·2
M. 9	130	9	One of 9	4·73	5·52	1250	6·63	0·53	0·5	1150	94·5
2M. 7	200	14	Two of 7	4·73	5·52	1250	6·40	0·53	0·7	1150	93·3
B. 9	140	9	One of 9	4·73	5·92	1250	8·0	0·53	0·5	1230	95·0
D. 9	300	9	One of 9	5·92	8·27	1200	6·0	0·48	1·0	1650	97·2
2D. 9	600	18	Two of 9	5·92	8·27	1200	7·67	...	2·0	1650	97·2

Designs of a nine-cylindered 200 B.H.P. and of an eighteen-cylindered 400 B.H.P. engine are under consideration. The 600 B.H.P. engine was specially designed for airship propulsion. In addition to the above, engines having cast-iron cylinders, and suitable for general industrial purposes, are constructed of 60, 90, 130, and 220 B.H.P. respectively.

The weight in lbs. per nominal B.H.P., including all accessories and also radiator and cooling water, is about $4\frac{1}{4}$ lbs. for all types.

examination of fig. 35, the crankshaft angle between consecutive impulses being $\frac{3 \times 360}{14} = 77\frac{1}{7}°$.

It has already been pointed out that in the ten-cylindered Anzani radial engine the two groups each of five cylinders act upon crank-pins at 180°, and work upon the four-stroke cycle; working impulses accordingly occur at equal angular intervals of $\frac{2 \times 360}{10} = 72°$ of crankshaft rotation, *i.e.* more frequently than with the above arrangement, though fewer cylinders are employed.

The eighteen-cylindered 600 B.H.P. unit is in reality two separate nine-cylindered engines for use in large air-craft fitted with double propellers; the engines are connected together by a gear-box in such manner that either engine may, at will, drive either or both of the propellers; each engine, moreover, is a complete power unit, with its own radiator, pumps, magnetos, and carburettors.[1] The propellers are about 13 feet in diameter, and

[1] For an illustrated account, see *The Engineer* for 31st July 1914.

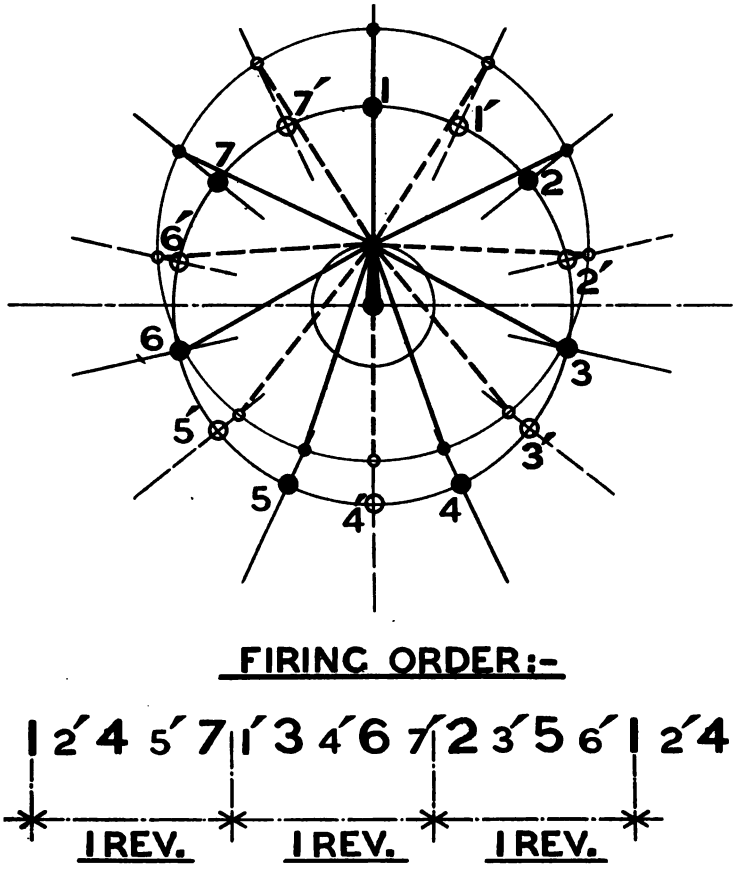

FIG. 35.—Firing order of the fourteen-cylinder Salmson engine.

are arranged to rotate in opposite directions at 900 revolutions per minute. The weight of one of these 600 B.H.P. combinations is as follows:—

Two engines, each 980 lbs. . . .	1960 lbs.
One connecting gear-box	500 „
Two sets of radiators and gear . .	400 „
Total . .	2860 lbs.

or $\frac{2860}{600} = 4{\cdot}8$ lbs. per nominal B.H.P.

The Dudbridge Iron Works, Ltd., give the weight—as mentioned in the Table—as about 4¼ lbs. per B.H.P. for all the Salmson types; this is a very low figure for a water-cooled design of engine.

Piston speed is medium, except in the case of the 300 and 600 B.H.P. designs, where it attains the somewhat high value, for continuous heavy-load running, of 1650 feet per minute; the revolution speed is only 1200, but the stroke is unusually long, being, roundly, 8¼ inches.

The values of ηp based on the nominal B.H.P. are somewhat higher than might have been anticipated from the valve setting.

Actual test of a seven-cylindered Salmson engine was made during July and August 1913 by a commission appointed by the French Automobile Club; the engine ran under test for 98 hours, the average speed being 1179 r.p.m., and average B.H.P. 82·3, while 0·53 lb. of petrol was consumed per B.H.P. hour. By Eq. (32), therefore, the value of ηp in this case was 81·5 lbs. per square inch, while by Eq. (41) the brake thermal efficiency was 24 per cent. The engine consumed 2½ pints of lubricating oil per hour—a very satisfactory performance.

A ten-hour test of a nine-cylinder 300 H.P. engine[1] showed an average speed of 1150 revolutions per minute, an average output of 284 B.H.P., and a petrol consumption of only 0·48 lb. per B.H.P. hour. The corresponding value of ηp is 96 lbs. per square inch, and the brake thermal efficiency 26·5 per cent. An overload test of one hour's duration showed an output of 322 B.H.P. at 1260 revolutions per minute, the petrol consumption per B.H.P. remaining practically unchanged.

Balancing.—With reference to the balancing of single-throw, single-acting four-stroke radial engines in general, F. W. Lanchester observes:[2] "The most satisfactory view to take of the balance of such a motor is that where the cylinders are sufficiently numerous the equal radial disposition of the pistons disposes with a sufficient degree of approximation of the secondary, or octave, inequality. . . . The energy content of the pistons as a whole is approximately constant, so that an engine of the radial type is not liable to torque irregularity due to piston inertia. The main piston motion can be dealt with with sufficient accuracy by regarding the whole weight of the pistons and connecting-rods as being concentrated as a rotary mass on the crank-pin, and balancing by an equivalent rotary counterweight on the crankshaft in the usual way."

[1] Figures supplied by the Dudbridge Iron Works, Ltd.

[2] *Proc. Inst. Auto. Eng.*, vol. viii., "Engine Balancing."

This is the method adopted in the Salmson engines; the counterweight is shown in fig. 29.

Some other Radial Aero Engines.

Among other aero engines of radial type may be mentioned:—

The Farcot Engine.—This air-cooled radial engine is arranged to work with the cylinder axes in a horizontal plane, *i.e.* with the crankshaft axis vertical, the propeller being driven through a reducing bevel gearing.

The R.E.P. Engine.—The earlier engines of M. Robert Pelterie were of the fan type, which is not now used; the later engines are of the radial type. The seven-cylindered 4·33″ × 6·30″ air-cooled motor develops, roundly, 90 B.H.P. at 1100 revolutions per minute. In this engine the valves are operated by the method already described in connection with the Anzani radial engines; both valves of each cylinder are worked by one rocker, and the cam-disc takes the form of a plate with a groove in its face in which run rollers attached to the sides of the valve tappet-rods; the plate rotates, of course, in the opposite direction to that of the crankshaft, and the groove is "plus and minus" a circle, so as to push and pull the rocker rod alternately, and thus successively open both the valves. The explosive mixture is supplied to the inlet valves by a series of pipes radiating from an annular chamber surrounding the rear part of the crank-case, somewhat as in the Anzani engine already described.

The Albatross Engine.—This is an American air-cooled radial aero engine, having six cylinders in two groups each of three, operating on two crank-pins at 180°; all valves are mechanically operated.

One inlet and one exhaust cam operate all the valves, in the manner already described in the case of the six-cylinder Anzani engine. The cylinders are fitted with auxiliary exhaust ports overrun by the pistons, as in the horizontal Darracq engine (see fig. 12). The mixture is supplied to the cylinders from an annular chamber by means of a system of radiating inlet pipes, as in the Anzani engines.

Aero engines of the radial type are not at present very numerous; the radial disposition gives a short engine with good balance, and permits of many cylinders, thus providing numerous working impulses at equal angular intervals of crankshaft revolution.

Cooling by air is, generally speaking, found somewhat unsatisfactory, while the water-cooling of radial engines effectively has given designers much trouble, though in the Salmson engine the difficulties appear to have been overcome. Perhaps the chief objection to be urged against the radial arrangement is that it opposes a good deal of area to the air-current, and thus increases head resistance, and also tends to obstruct the view of the pilot when—as is most commonly the case—the propeller and engine are fitted in the front of the aeroplane.

CHAPTER VI.

DIAGONAL OR "VEE" AERO ENGINES.

WHEN the cylinders of an engine are arranged in two groups placed at an angle with one another, as in fig. 36, the engine is described as of "Diagonal" or "Vee" type; the two-cylindered Vee engine so largely used in motor cycles furnishes the simplest illustration of this type.

Thus, if in fig. 36 there be two cylinders only, A and B, with axes making an angle $\alpha°$ with one another, and pistons both acting on one crank-pin, and cylinder A be supposed to fire, then it *could* be arranged that B fired when the crank-pin P had turned through the angle α; but in this case the impulses would occur very irregularly, as A would not fire until the crank-pin had described a further $(720-\alpha)°$ of angle. Hence it is always provided that B shall fire $(360+\alpha)°$ of crankshaft angle *after* A; and then it follows, for single-acting four-stroke cycle cylinders, that A fires $(360-\alpha)°$ after B; so that with two cylinders only the impulses occur alternately at $(360+\alpha)$ and $(360-\alpha)$ degrees of crank-angle rotation. Obviously, in order that the working impulses may occur at equal intervals of crankshaft rotation, it is necessary to make $\alpha=0$, *i.e.* to place the two cylinders "together," in which case a working impulse occurs every revolution, but the balance of the engine is bad; such engines have occasionally been

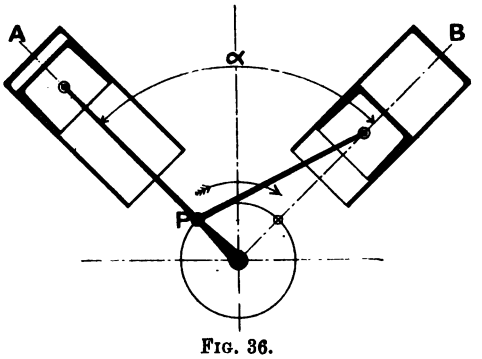

FIG. 36.

used in car service, as, for example, by Messrs de Dion in their 9 H.P. design.

Next, let there be N cylinders in *each* of the two groups A and B, so that the total number of cylinders is 2N; the engine is supposed to be single-acting, and of the four-stroke type. The crankshaft having N throws, two pistons—one of each group—act upon each crank-pin.

Then, considering group A (fig. 36), the working impulses occur at angular intervals of $\frac{720}{N}$ degrees of crankshaft revolution, as also do those of group B; hence, from the combined groups, impulses occur at angular intervals of $\frac{1}{2}\frac{720}{N}$, *i.e.* $\frac{360}{N}$ degrees of crankshaft revolution.

Those of group B occur $a°$ later than those of group A; in order that the angular intervals may be equal throughout the cycle, it is clear, therefore, that we must have:

$$a = \frac{360}{N} \quad . \quad . \quad . \quad . \quad . \quad . \quad (47)$$

So that, for single-acting four-stroke Vee engines with two pistons acting on each crank-pin, the angle between the groups must be as given in the Table hereunder for equal angular intervals of crankshaft rotation between working impulses:—

Total No. of cylinders. 2N.	No. of cylinders in each group. N.	No. of throws in crankshaft.	a in degrees.
2	1	1	360
4	2	2	180
6	3	3	120
8	4	4	90
12	6	6	60
16	8	8	45

The case of two cylinders has been already discussed[1]; with four cylinders and a two-throw crankshaft, for equal angular intervals the cylinder groups must be opposite one another, and we thus reproduce the case illustrated in fig. 11, B (*supra*).

Six-cylindered Vee aero engines are not common, but have

[1] As $a = 360$ gives the same arrangement as $a = 0$.

been constructed by Messrs Simms and the All British Engine Co. ("A.B.C."). The eight-cylindered Vee is the preponderating type; a few makers, *e.g.* Messrs Antoinette, "A.B.C.," and Renault, build also twelve- and sixteen-cylindered designs, but these are rarely seen.

Excepting only the Renault, De Dion, and Pipe Co.'s designs, it may be said that the Vee-type aero engines are almost always water-cooled; Messrs Renault have developed a method of air-cooling by fan which is referred to later. The Vee-type lends itself very conveniently to water-cooling, and although the balance of the prevailing eight-cylindered design is not quite so good as that of the multi-cylindered radial engine, yet the Vee engine is short and compact, offering little head resistance and view obstruction, and appears likely to be much used in the future in air service.

As a typical case of a Vee-type aero engine the British-built eight-cylindered, water-cooled design of the Wolseley Co. has been selected. The Wolseley Co. has devoted attention to the design of aero engines since 1907, though at first more in connection with the propulsion of dirigibles than of aeroplanes; their first design appeared in 1908, and was of the normal four-cylindered vertical car type, rated at 30 horse-power and of $3\frac{3}{4}''$ bore and $5\frac{1}{2}''$ stroke. This soon proved unsuitable, and of insufficient power, and was quickly followed by an eight-cylindered Vee engine of $3\frac{3}{4}''$ bore and $5''$ stroke, rated at 50 horse-power; in this engine the propeller was driven from the half-speed shaft, as is not infrequently still done. The rapid increase in the size and power requirements of dirigibles soon necessitated the provision of engines of greater output, and so, after producing three further designs of eight-cylindered 60 horse-power Vee engine, they evolved their very successful $5'' \times 7''$, eight-cylindered, 120 horse-power design, of which a description is given later in this chapter.

The Table below summarises the leading particulars of the Wolseley aero engines, and indicates their progress in increase of power and reduction in weight per B.H.P.; the piston speed is somewhat low in the first five cases, but in No. 6 is about equal to that of the present long-lived touring-car engine; the values of ηp are decidedly low, while the petrol consumption, even in the case of No. 6, is rather higher than is frequently found in more recent tests. It must be said, however, that the Table includes only engines up to the end of 1912, and that later designs have achieved better results.

The ratio of the rated to the maximum horse-power for Nos. 4, 5, and 6 averages about 0·8, a value commonly found in car service, and which experience shows does not harass the engine in long-run periods.

LEADING PARTICULARS OF THE WOLSELEY CO.'S AERO ENGINES.
PERIOD 1907–1912.

No.	Type.	No. of cylinders.	Bore in inches.	Stroke in inches.	Normal speed.		Rated B.H.P. at normal speed.	Weight in lbs. per normal B.H.P.	Petrol, lbs. per B.H.P. hour.	Lubricating oil, gallons per hour.	ηp at normal output, lbs. per square inch.	Maximum B.H.P. for short periods.	Revs. per min. at maximum B.H.P.	Value of ηp at maximum B.H.P.
					Revs. per min.	Piston speed in ft./min.								
1	Car.	4	3¾	5½	1100	1007	30	7·0	...	...	89	35·3	1420	81·4
2	V	8	3¾	5	1350	1126	50	8·0	0·726	0·28	66·5	60·4	1360	79·6
3	V	8	3¾	5½	1200	1100	60	6·1	...	...	81·5	75	...	...
4	V	8	3¾	5½	1150	1055	60	4·9	...	...	85·2	85	1800	77·1
5	V	8	3¾	5½	1150	1055	60	5·3	...	...	85·2	85	1800	77·1
6	V	8	5	7	1150	1340	120	5·3	0·576	1·5	75·4	147	1400	75·6

The weight of No. 1 is exclusive of the flywheel. No. 3 was fitted with a flywheel weighing 15 lbs.; this is included in the stated weight.

The 120 H.P. Wolseley Aero Engine.—An external view is given in fig. 37 of the eight-cylindered, 120 H.P., water-cooled aero engine of the Wolseley Co., of Birmingham; the cylinders are in two groups each of four, and are placed mutually at 90°, so that working impulses occur at equidistant angular intervals of 90° of crankshaft rotation, as already explained. The angular space between the cylinder groups is utilised to accommodate the carburettor, ignition magneto, wiring, inlet piping, and valve-operating gear; in the front of the illustration will be seen the water and oil pumps and the housed gearing by which the magneto is driven; the exhaust manifolds are also clearly shown. The compactness of the Vee type of engine, while at the same time the valves and valve-gear, magneto, carburettor, and pumps remain readily accessible, will be appreciated from this view; it may be noted also that by removing the light bottom cover of the crank-case the big ends and main bearings may be examined and adjusted without further dismantling the engine.

A transverse section through one of the cylinders, showing also the crankshaft and valve drive of the 1912 design, appears in fig. 38, while a longitudinal section of part of the crank-case is given in fig. 39.

The Crankshaft.—This is constructed of Vickers nickel-chrome steel, with four throws all in one plane, as in the normal four-cylinder car engine. The crankshaft is borne in three white-metalled bearings, that on the left (fig. 39) being about 5·35″ in length; the central bearing is about 4·04″, and the third about 3·9″, so that the

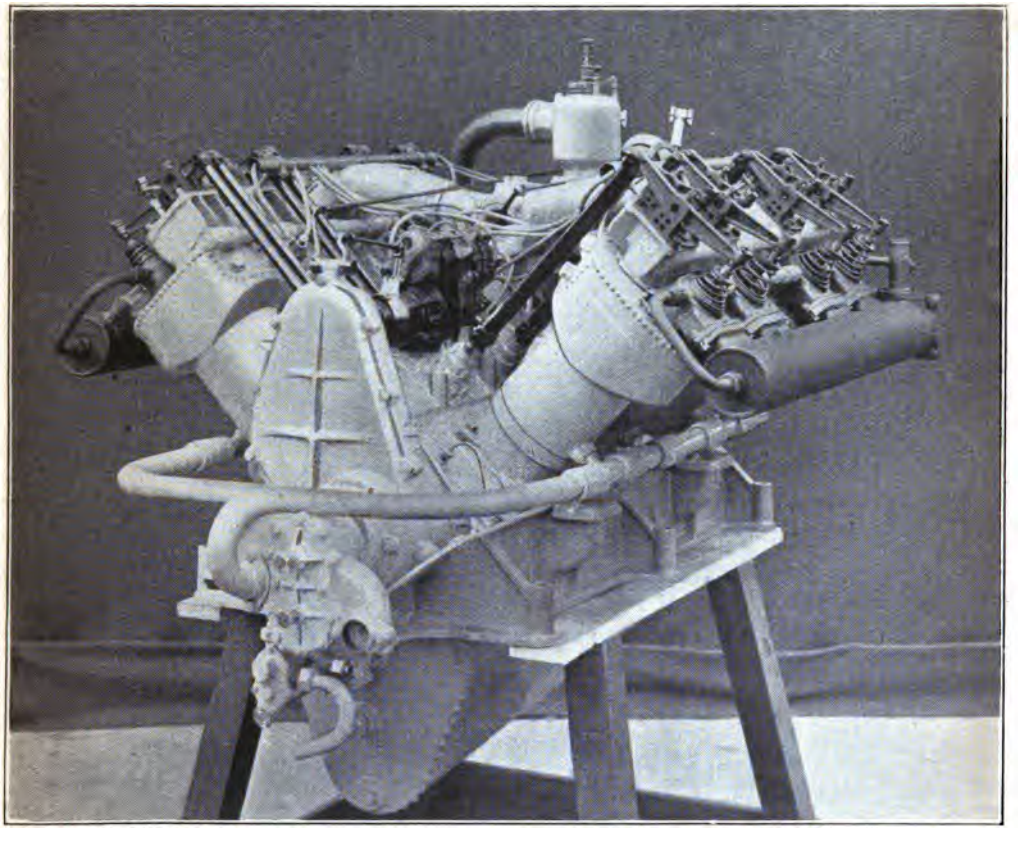

FIG. 37.—External view of eight-cylinder 120 H.P. Wolseley engine.

total length of main bearing is about 13¼″. In the bearings the crankshaft is 2·38″ in outside diameter, with a hole 1·8″ diameter bored through it; the crank-pins are slightly greater in diameter than the shaft, viz. 2·45″, with a 1·63″ diameter hole through them, and are 4·6″ long between the crank-cheeks, in order to accommodate two connecting-rod big ends each, as shown in fig. 39.

Thus the crankshaft in the main bearings is really a *tube* of

high-quality steel, of thickness only 0·29″. If D be the outside diameter of the shaft in inches, and h that of the hole through it, then the torsional strength of the shaft is proportional to the value of $\frac{D^4-h^4}{D}$; it will be observed that if $h=0$ we get the case of a solid shaft, and that its torsional strength is proportional to the *cube* of its diameter. Now let Δ denote the diameter of a *solid* shaft of equal torsional strength to the hollow shaft; then Δ must be found from the equation:

$$\Delta^3=\frac{D^4-h^4}{D} \quad . \quad . \quad . \quad . \quad . \quad (48)$$

In this case $D=2{\cdot}38$ and $h=1{\cdot}8$, whence it will be found that $\Delta=2{\cdot}1$ inches; that is, a solid shaft 2·1″ in diameter would have the same torsional strength as the hollow shaft adopted.

Observe, however, that the equivalent solid shaft has a cross-sectional area of 3·46 square inches, whereas that of the actual hollow shaft is but 1·91 square inches; thus the hollow shaft is only about one-half as heavy as the equivalent solid.

Crankshaft diameter must be considered from the point of view of stiffness as well as from that of torsional strength, and it may easily happen where the shaft is borne in few bearings—as, *e.g.*, in the 26 H.P. eight-cylindered Vee-type De Dion car engine, where there are but *two* main bearings—considerations of stiffness call for a shaft diameter in excess of that required for torsion alone.

The stiffness of beams is measured by the ratio of the deflection to the span; in the comparison here instituted it is easily shown that the stiffness of the hollow shaft is to that of the equivalent solid shaft in the ratio $\frac{\Delta^4}{D^4-h^4}$,[1] which has here the value of, roundly, 0·9, so that a hollow shaft is somewhat less rigid than the torsionally equivalent solid shaft.

The rules of Lloyd's Register for marine internal-combustion engines require that the crankshaft diameter in inches shall be deduced from the formula:

$$\Delta=c\sqrt[3]{d^2s}\,, \quad . \quad . \quad . \quad . \quad . \quad (49)$$

where d and s are respectively the cylinder bore and stroke, both in inches, and c is a constant. For four-cylinder engines of four-stroke cycle, and in designs—as in this—where there are two

[1] It may be noted that, from Eq. (48), this is equal to $\frac{\Delta}{D}$, and is thus always less than unity.

cranks between each pair of main bearings, the value adopted for c is 0·38. It is of interest to ascertain the value of c implied in Eq. (49) in the case of this Wolseley aero engine; thus we have $\Delta = 2{\cdot}1$, $d = 5$, and $s = 7$; hence we get $c = 0{\cdot}375$, which is in practical agreement with the above value.

Connecting-rods.—The connecting-rods are of oil-hardened Vickers nickel-chrome steel; the shanks are plain circular *tubes* of uniform thickness and diameter, 1·3″ outside and 1·1″ inside; the details are clearly indicated in figs. 38 and 39, B B. The length between centres is about 11″; the ratio of this to the stroke length is only 1·6, as compared with the 2·25 usual in car engines, so that the obliquity of the rods is increased. The big-end bearings are of bronze, and the bearing caps are attached by two ½″ big-end bolts with thin "cheese" heads and a single, pinned, castle nut; each bolt has a ¼″ lightening hole drilled down it to a depth of 1⅜″ from the head. Each big-end bearing is 2·45″ diameter and 2·25″ long, so that its "projected area" is 5½ square inches, and the intensity of bearing pressure due to an explosion pressure of 300 lbs. per square inch is 1070 lbs. per square inch; this is a satisfactorily low value, the figure for car engines being commonly about 1500. The gudgeon pins are hollow steel tubes 1⅛″ outside diameter and about ¾″ inch internal diameter; the bearing is of bronze, and the intensity of bearing pressure due to an explosion pressure as above, is about 1600 lbs. per square inch of projected area; as the value in car engines is usually from 2500 to 3000 lbs. per square inch, the figure here also is satisfactory.

Pistons.—The pistons C C (fig. 38) are of drawn steel, machined and ground to gauge; the crowns are slightly coned, ⅛″ in thickness, and are furnished with two cooling and strengthening rings on their lower surface; the cylindrical portion of the piston has a general thickness of only $\frac{1}{16}$″, and is 4⅝″ long, *i.e.* only about 0·9 of the cylinder bore.

There are four spring rings, the upper two being of cast-iron, each about ⅜″ wide, while the lower two are of phosphor bronze, $\frac{11}{16}$″ and 1″ in width respectively, the wider ring being placed in the lower portion or "skirt" of the piston, below the gudgeon pin.

The axis of the gudgeon pin is only 1½″ from the lower edge of the piston, and not half way up, as would appear preferable, in order to distribute more uniformly the connecting-rod thrust; lightening holes, as shown, are made in the gudgeon zone, while

just above the gudgeon bearing a light diaphragm is fitted, apparently for the purpose of preventing oil thrown from the crank-cheeks from impinging directly upon the heated lower surface of the piston crowns, and thus becoming carbonised.

Cylinders.—The working barrels D D are of high-carbon steel, machined and finally ground to a finished bore of 5″ and thickness of only $\frac{1}{16}$″.

The exceedingly strong and tough steel alloys which depend for their special qualities upon very careful heat treatment are not used for the working barrels of cylinders, as a chance overheating during running might easily ruin them. Notwithstanding their extreme thinness, the working barrels are not really highly stressed by the explosions; the maximum explosion pressure is commonly about 300 lbs. per square inch, and the corresponding bursting stress is accordingly only $\frac{300 \times 5}{2 \times \frac{1}{16}} = 12{,}000$ lbs. per square inch, which is no greater than that ordinarily used with mild steel subjected to a varying load of one kind (in this case, tension) only. The chief difficulty experienced with these very thin barrels arises from the distortion to which they are liable owing to irregular heating during working; to reduce the chance of this as much as possible, they are always made as nearly as possible of simple cylindrical form, free from bosses and side pockets; largely due to this is the almost universal practice of locating the valves in the combustion head, although this involves increased complexity and weight in the valve-actuating mechanism. In the selection of the steel for the working barrels, the chief consideration is that the quality chosen shall be such as experience has shown forms a smooth, hard, and bright surface in working.

At the lower end of the working barrel a flange is left by which it is attached to the crank-case by studs and nuts, as shown at Z, fig. 38; at the upper end the thickness is increased to about $\frac{1}{8}$″ for a short distance, and the barrel is then contracted to a bore of $4\frac{1}{4}$″, and screwed with a fine thread, by means of which the cast-iron combustion head EE is attached; this combustion head is water-jacketed as indicated, and carries the exhaust and inlet valves, ignition plug, and the fulcrum of the rocking lever of the valve-gear; the ruling thickness of the casting is $\frac{3}{16}$″ to $\frac{1}{4}$″.

The water-jackets are of spun aluminium sheet, attached at their upper ends to the combustion heads by closely pitched button-

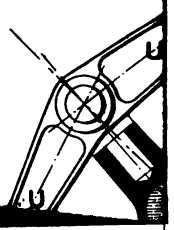

...ed on from the crank-cheeks, thus lubricating the camshaft,

l

j
e
c
t

r
c

f
r
h
t
s
c

b

i
s
o
a
i
a
o
l
v
c
t
s
h

w
a
l
s
o
i
w
v

ends to the combustion heads by closely pitched button-

headed screws, as shown in fig. 38; a watertight expansion joint is provided at the junction with the working barrel at the lower end by means of a ring of "Dermatine," thus enabling the working barrels to expand freely without restraint from the jackets.

The cooling water enters at the bottom of the jacket from the pipe G, and leaves at the very topmost point through a passage H in the hollow column supporting the fulcrum of the valve rocker; the formation of air- or steam-pockets is thus practically impossible. The cooling water is pump-circulated. It will be noted that the valve seats are both well water-cooled; this is especially of importance in the case of the exhaust valve, and the seating in this design is formed in the combustion head casting itself; the ruling width of the cooling water space is about $\frac{5}{16}''$.

In 1913 the Wolseley Co. produced two designs of Vee engine, namely, a 75 H.P. $3\frac{3}{4}'' \times 5\frac{1}{2}''$, and a 90 H.P. $4'' \times 5\frac{1}{2}''$, in which only the exhaust valves were water-cooled, the remaining part of the engine being air-cooled; in these engines the weight per B.H.P. was, roundly, 5 lbs.; the object of the reduced water-cooling was, of course, to save weight of water, jackets, radiators, etc., and at the same time obtain an engine capable of running for long periods without overheating. In their later practice, however, as illustrated in fig. 37, they have reverted to complete water-cooling again.

Crank-case.—The upper part of the crank-case in which the cylinders stand and in which the main bearings are carried is a substantial casting of aluminium, the general features of which are shown clearly in figs. 37, 38, and 39; the lower cover is of thin steel plate, easily removed, and giving immediate access to the main bearings and big ends.

Lubrication is forced to the main bearings and big ends; the gudgeons, pistons, camshaft, etc., depend upon the "splash."

The manner in which the oil is conveyed along the hollow crankshaft is indicated clearly in fig. 39; it will be noted that in each crank-pin and main bearing a radial hole is drilled in the crankshaft, which is an undesirable practice; in the central main bearing there are even shown *two* radial holes drilled in the same transverse plane!

Two oil-pumps are fitted; one of these draws from an external reservoir and delivers to the main bearings, and thence *via* the hollow crankshaft to the several crank-pins; the exuding oil is whirled off from the crank-cheeks, thus lubricating the camshaft,

pistons, etc.; the excess finally collects in a sump at the bottom of the crank-case, from which the second pump delivers it back to the external reservoir. The use of an external oil reservoir allows the oil to become cooled and thus renders the lubrication more effective; the avoidance of overheating the lubricant is an important point in the heavily worked engines of air-craft.

Carburation.—The carburettor is shown in section in fig. 40, and comprises a single spraying nozzle A, with annular float B and choke-tube Q (see also fig. 38); the annular float renders the level of the petrol in the nozzle independent of small inclinations of the engine. The cylinder suction causes a rush of air through Q, which takes up petrol spray from the nozzle A, forming a rich mixture in the chamber C; this mixing chamber is exhaust- or hot-water-jacketed as shown, so as to assist in vaporising the petrol. The rich mixture is diluted by additional air supplied through the light adjustable spring-loaded automatic air-valve D by way of the passage E, which communicates with the crank-case, so that the additional air supply is warmed and, contrariwise, the crank-case cooled, by the resulting circulation through it; fresh, cold air can also be admitted at will in any desired quantity by means of the movable slotted sleeve O (fig. 38); thus the volume, temperature, and quality of the mixture are very completely adjustable. The warm oil-misty air from the crank-case is delivered to the carburettor under slight pressure by an air-pump driven by the engine, thus ensuring an adequate supply when at high altitudes. F is a "dash-pot" disc attached to the spindle of the air-valve D in order to damp out any rapid motions in the valve during running.

The mixture passes from the hot-jacketed chamber C through the hand-regulated sliding throttle valve H, and by way of the passages J J to the inlet piping K and thence to the several cylinders; a notch L in the edge of the throttle prevents the mixture from being completely cut off, and provides the cylinders with a small quantity of rich mixture when the throttle is closed, sufficient to keep the engine slowly "ticking round" when running light; a drip trough P placed below the float chamber intercepts any petrol that may inadvertently leak. It will be seen that the arrangements provided, enabling the pilot to adjust the quality and quantity of the mixture while running, are very complete in this design.

Ignition.—Ignition is on the Bosch "dual" method, which provides a coil and accumulators for starting and as a stand-by, and a high-tension magneto for normal running. The magneto—shown in fig. 37—is of the shield type, giving four sparks per revolution; as the engine also requires four sparks per crankshaft revolution, shield and crankshaft are geared to run at equal revolution rates.

Camshaft.—The camshaft is shown clearly in figs. 38 and 39, at R R, and is a hardened steel tube with an external diameter of 1·3″ and internal of 0·9″; it is in two pieces, connected by a flanged coupling as shown. The valve cams, eight in number, are each ¼″ wide, and are formed in one with the shaft, and accurately ground to the desired form. The camshaft is driven at half-speed from the crankshaft by cut-steel gear wheels, and is wholly enclosed within the crank-case.

Valves.—The valves, fig. 38, are of nickel steel; the cone-seated exhaust valve W is 2·3″ in diameter in the throat, with a stem 0·39″ diameter; the valve seat is formed in the combustion head casting, and the exhaust gases pass very directly away from the cylinder through the exit X. The valve stem is rather long, viz. 5″, and terminates in a screwed adjusting cap and lock-nut; the valve is held to its seat by the helical spring shown, which bears against a dished washer attached to the stem; the valve head is of light section, and connected with the spindle by a fillet of large radius; the valve seat and stem guide are both effectively water-jacketed.

The inlet valve is flat-seated, 2·3″ in diameter in the throat, and is carried in a separate cast cage attached to the combustion head casting by a screwed nut as shown in fig. 38; the cage and contained valve can thus be readily removed, and through the same hole the exhaust valve can be withdrawn for examination or replacement. The stem of the inlet valve is also rather long, and the spring washer apparently somewhat massive; at the top of the stem a screwed adjusting cap and lock-nut are provided as in the exhaust valve.

The inlet valve guide is 0·62″ diameter, so that the *net* cross-sectional area for inflow of mixture is 3·5 square inches, as three webs, each ⅛″ thick, support the guide at its lower end.

If a denote the net cross-sectional area through the valve, in square inches, A that of the piston, and σ the piston speed in feet

per minute, then the mean velocity of gas, v, through the valve, in feet per minute, is clearly given by the relation:

$$v = \frac{A}{a}\sigma \quad . \quad . \quad . \quad . \quad . \quad . \quad (50)$$

Here $A = 19{\cdot}6$; $a = 3{\cdot}5$; and $\sigma = 1340$: hence $v = 7500$ feet per minute, roundly. In recent car engines v is commonly from 6500 to 7000 feet per minute.

Actuation of Valves.—In the design shown in fig. 38 both inlet and exhaust valves are ingeniously operated by one cam, rod, and rocker; the rod is a "push-rod" for the exhaust and a "pull-rod" for the inlet; the valves themselves are held on their seats by the usual helical springs. In the case of the exhaust valve, when the "plus" part of the cam comes into contact with the roller the upper end of the rocker U is pushed upwards and the lower end depressed, thus opening the valve. When the "minus" part of the cam makes contact with the rocker the helical spring housed in the box S surrounding the tappet guide pulls down the rod and upper half of the rocker and thus opens the inlet valve. This arrangement evidently saves weight and mechanism and is still used by some other makers, as, *e.g.* Messrs Panhard; it will be observed, however, that the spring in the box S has to overcome (1) the resistance of the inlet valve spring; (2) the inertia of the tappet, push-rod, rocker, and valve; and (3) the friction of the mechanism. In this case the mass is evidently relatively considerable, and it has in consequence been found difficult to ensure that the roller shall maintain contact with the "minus" part of the cam at engine speeds exceeding about 1200 revolutions per minute; accordingly in their later designs the Wolseley Company actuate each valve independently by its own cam, push-rod, and rocker, as indicated in fig. 37, which illustrates the 1913 design.

Trial Results.—Four 120 H.P. eight-cylindered $5'' \times 7''$ engines of the design as illustrated in figs. 38 and 39 were built for the Italian Government for the propulsion of dirigibles; before acceptance, each of these was required to undergo satisfactorily the following tests:—

1. A run of 18 consecutive hours' duration at a speed of 1150 r.p.m., immediately followed by:—

2. A run of 30 minutes at 1250 r.p.m. and

3. A run of four hours at 1000 r.p.m. with the engine inclined 28° to the vertical in any direction.

The engines all successfully accomplished these tests, the power developed and fuel required being as follows:—

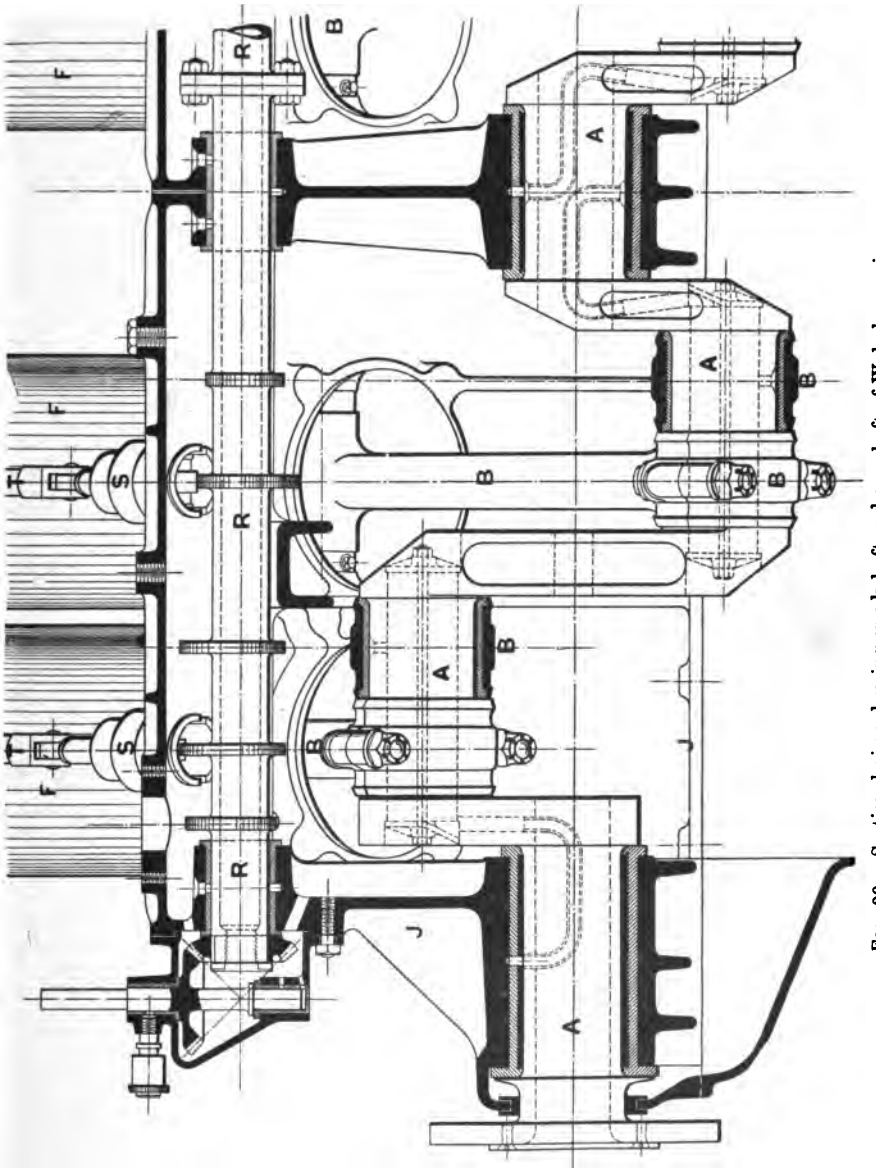

FIG. 39.—Sectional view showing crankshaft and camshaft of Wolseley engine.

Throughout the 18-hour test at 1150 r.p.m. the average B.H.P. developed was 122·6, corresponding to a value of ηp from Eq. (32) of 76·8 lbs. per square inch.

From Eq. 38 (*supra*) the mean torque corresponding to 122·6 B.H.P. at 1150 revs. per minute is 560 lb.-feet, *i.e.* 6720 lb.-inches; in eight-cylinder Vee engines of this kind examination shows that the maximum torque per cycle is about $1\frac{1}{2}$ times the mean torque, so that the maximum cyclic torque may be taken here as T = 10,080

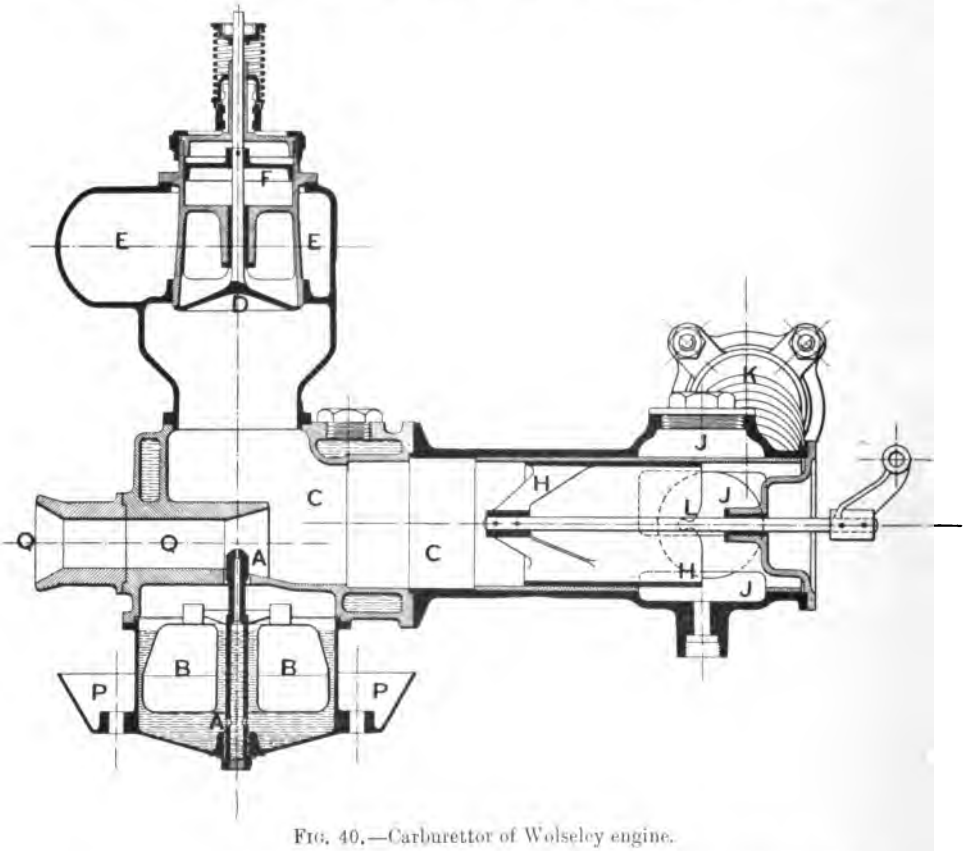

FIG. 40.—Carburettor of Wolseley engine.

lb.-inches. Now if f denote the maximum shearing stress in the crankshaft due to the torque T, then for hollow crankshafts as this we have:

$$f = \frac{16DT}{\pi(D^4 - h^4)} \text{ lbs. per square inch} \quad . \quad . \quad . \quad (51)$$

and on substituting for T, D, and h their values, in this case we obtain:

$$f = 5660 \text{ lbs. per square inch.}$$

The steel here employed is, of course, of special strength and toughness; according to Professor Unwin,[1] the ordinary working stress of mild steel in torsion under a varying load producing stress in one direction only is 5400 lbs. per square inch; it thus appears that this crankshaft is not at all heavily stressed in normal working.

The petrol consumption during this test averaged 0·58 lb. per B.H.P. hour, the corresponding brake thermal efficiency from Eq. (41) being, roundly, 22 per cent. The oil used amounted to 1·53 gallons per hour, a reasonably good figure for an engine of this power on a prolonged full-load run.

A subsequent test of one of these engines showed that at 800 revolutions per minute the B.H.P. was 99, while when the speed was increased to 1400 revolutions per minute the power output rose to 147 B.H.P.; a speed of 1400 revolutions per minute corresponds to the somewhat high piston speed of 1633 feet per minute.

The value of ηp was well maintained, being nearly the same as at normal speed, thus indicating the adequacy in size of the carburettor, valves, and piping.

In these tests the cooling water for the cylinder jackets was pump-circulated from a large cooling tank; the inlet temperature at the engine averaged 46·5° F. and the outlet temperature 122° F.; the engine was thus run much cooler than is usual in car-engine practice.

The Dorman Engine.—Messrs Dorman & Company of Stafford have produced eight-cylindered Vee-type aero engines; an illustration of their 80 H.P. design is given in fig. 41.

The general arrangement is similar to that of the engine just described, the cylinders being grouped in fours mutually at 90°, while the eight pistons actuate a four-throw crankshaft, each crank-pin taking two connecting-rod ends. The bore and stroke were 4 and 4·75 inches respectively, with a normal speed of 1300 revolutions per minute, corresponding to the moderate piston speed of only 1030 feet per minute. Eighty B.H.P. at 1300 revolutions per minute implies from Eq. (32) the rather high value for ηp of 102 lbs. per square inch.

The cylinders in this design were of cast-iron in one piece, and were attached to the crank-case by flanged joints each having six bolts and nuts; the jacket walls were of seamless spun corrugated thin copper, watertightness at top and bottom being secured by

[1] *Machine Design*, 11th ed., vol. i. p. 43.

shrunk-on steel bands. The water-cooling extended only to the working barrels of the cylinders, the valve seats, formed in the combustion head, being unjacketed.

Ordinarily, the exhaust valve being the hottest part of the engine, its seat and frequently also its stem guide are very carefully water-cooled; in the Dorman engine, however, there were auxiliary exhaust ports in the lower part of the cylinder barrels

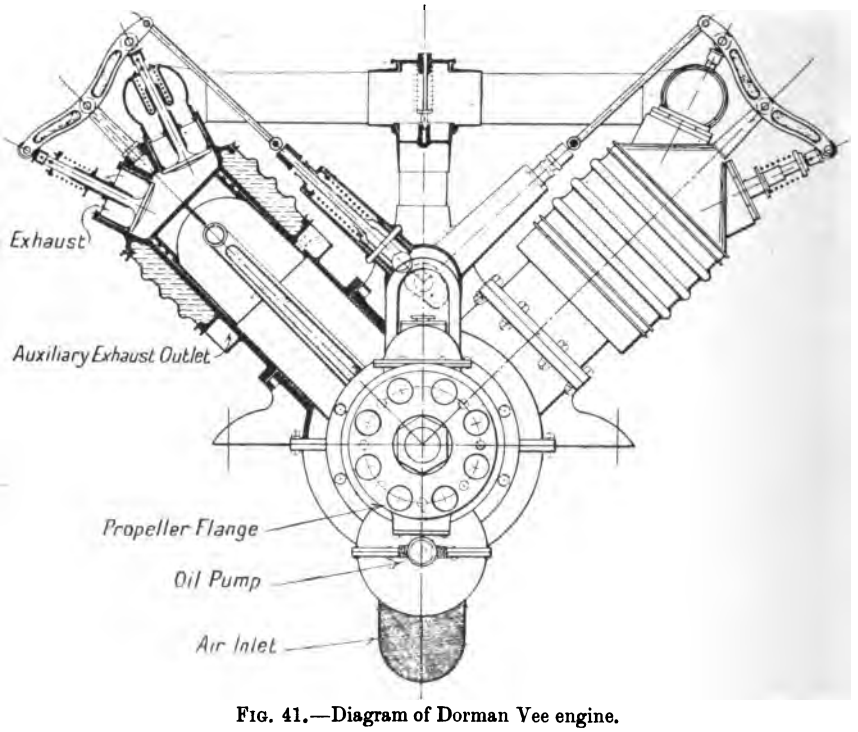

FIG. 41.—Diagram of Dorman Vee engine.

overrun by the pistons—as in the horizontal Darracq aero engine already described,—through which the major part of the exhaust gases were permitted to escape; these auxiliary exhaust ports remained open during the last $\frac{5}{8}''$ of the down-stroke and first $\frac{5}{8}''$ of the return.

The device of the auxiliary exhaust port was tried in a number of early designs of aero engines, but has not survived in practice; if the holes were uncovered by the lower edge of the piston when near the top of its stroke considerable loss of lubricating oil from the crank-case was found to occur; the auxiliary ports were also

frequently found to "upset the mixture" supplied to the engine, and thus to cause defective running. In the Dorman engines the pistons were made so long that their lower edges did not overrun the auxiliary exhaust ports. The gases discharged from these ports passed into a belt surrounding the cylinder, the several belts being connected up, and the gases thus ultimately released into the atmosphere at a desired point. Both inlet and exhaust valves were flat-seated, with a diameter in the throat of $2\frac{3}{8}''$ and a lift of $\frac{5}{16}''$; they were of nickel steel, and *each* valve was carried in a cage of case-hardened Ubas steel screwed into the cast-iron combustion head of the cylinder.

The flat-topped pistons were of cast-iron, 4″ in diameter and 5″ in length, each with three spring rings.

The cylinders in this engine were exactly *vis-à-vis*, opposite cylinders actuating the same crank-pin; one piston of each pair was fitted with two slender connecting-rods working one on each side of the single central rod of the other piston.

The four-throw tubular crankshaft was of Jessop's nickel-chrome steel and was borne in five white-metalled bearings; there was also a large ball thrust bearing immediately behind the propeller flange; in four of the main bearings the crankshaft was $1\frac{7}{8}''$ in diameter with a 1″ hole through it, while in the fifth, viz. that nearest the propeller, the shaft was 2″ in diameter with a $1\frac{3}{8}''$ diameter hole.

For the shaft in this fifth bearing we have from Eq. (48) $\Delta = 1{\cdot}838$ inches, whence the value of the constant in Eq. (49) is here:

$$C = 0{\cdot}434.$$

For eight-cylindered, single-acting, four-stroke cycle engines, where there are two cranks between each pair of bearings, Lloyd's rules for marine explosion engines require a value of $C = 0{\cdot}425$; in this design it has evidently been considered that the two pistons acting on one long crank-pin constitute two cranks at 0°, and even so the crankshaft appears as of ample strength for its duty.

Into the part of the crankshaft drilled with a 1″ hole light tubes of $\frac{7}{8}''$ in external diameter, with their ends expanded, were spun; the annular space of $\frac{1}{16}''$ in width all round was utilised to carry the lubricating oil pumped under pressure to the main bearings, while cold air was enabled to pass through the tubes and thus help to cool the oil and bearings.

A gauze-covered bell-mouthed orifice was formed in the bottom portion of the crank-case, while to the upper portion a connection was made with the carburettor inlet; thus the air used by the cylinders was drawn through the crank-case, cooling the oil and moving parts, and becoming itself warmed and thus assisting the vaporisation of the petrol. It has already been stated that in the Wolseley engine the air is drawn in great part through the crank-case with a similar object.

The Dorman engine was fitted with a light flywheel of Jessop steel; in the design illustrated in fig. 41 the diameter of the wheel was 14″, with a rim 1¼″ wide and ¾″ deep.

Both inlet and exhaust valves of each cylinder were operated by a single plus-and-minus cam, tappet, push-rod, and rocker, as already described in connection with the Wolseley engine. The weight of the 80 H.P. engine complete with flywheel and all immediate accessories was about 375 lbs.; the radiator, piping, and contained water weighed a further 75 lbs.: total 450 lbs.; this corresponds to 5·6 lbs. per rated brake horse-power.

The Sunbeam Engine.—Another notable British aero engine of Vee-type is the eight-cylindered 150 H.P. water-cooled product of the Sunbeam Motor Car Co., Ltd., of Wolverhampton. In its general arrangement of parts this engine resembles those above described; the bore is 3·54″ and stroke 5·92″, and normal speed 2000 revolutions per minute, corresponding to the high piston speed of 1973 feet per minute. The nose piece of the engine carries a 2:1 reduction gear, the geared-down shaft running in two massive ball bearings; the propeller speed is thus only 1000 revolutions per minute.

The cylinders are of cast-iron, each group of four being cast in one piece; the jackets are of electrolytically deposited copper. Each group of cylinders is supplied with mixture by a Claudet-Hobson carburettor; the petrol consumption at full load is stated to be 0·54 lb. per B.H.P. hour.

The Sunbeam Company also build similar twelve-cylindered engines developing 225 brake horse-power at 2000 revolutions per minute. The Sunbeam engines weigh, approximately, only 3¼ lbs. per nominal brake horse-power, exclusive of radiators, piping, and water; they are thus very light.

The Renault Vee Engines.—Air-cooled Vee engines for aircraft are rare, but Messrs Renault have for several years produced a

series of such engines, comprising designs of 40, 50, and 70 horse-power respectively, each with eight cylinders, the two groups of four being mutually at 90°, and a 90 horse-power design with twelve cylinders in two groups of six mutually at 60°, agreeably with Eq. (47) (*supra*). A line view of one of the eight-cylinder engines appears in fig. 42.

The cylinders, furnished with numerous cooling fins, are of cast-iron with separate, cast, combustion heads, the two being held together and to the aluminium alloy crank-case by a cruciform yoke and four long bolts as shown; the pistons are of cast steel with cast-iron spring rings.

The valves are situated on the inner side of the combustion heads, with the exhaust above the inlet; the inlets are directly actuated by cam and tappet in the usual manner, while for the exhausts "overhead gear," including push-rods and rockers, is used.

The air-stream by which the cylinders are cooled is created by an encased centrifugal fan of relatively large diameter, mounted on the end of the crankshaft; air is delivered by this fan into an enclosed space AAA between the cylinders, and escapes between the cooling fins.

Though effective, this large fan and bulky casing considerably increase the size of the engine, and must also add materially to the weight and diminish the effective power; in fact, the weight per nominal B.H.P., as given in the Table below, is notably high for an engine of air-cooled type, and actually exceeds that of most of the best-known water-cooled Vee aero engines; thus it is not clear what advantage is gained, as, *cœteris paribus*, a water-cooled is usually more efficient, and is certainly more durable, than an air-cooled engine; nevertheless the Renault air-cooled Vee engines have yielded good results in actual service, and have been somewhat largely used in England.

The four-throw steel crankshaft is borne in five bearings, of which the outer two are of the ball type, and the inner three white metal in bronze. It has been mentioned already that in the Anzani engines also a combination of plain and ball bearings is adopted, with the object of damping out vibrations, otherwise liable to occur at high speeds.

The lubrication is not forced; an oil-pump of the gear-wheel type delivers oil from the crank-case sump to a gauze-bottomed

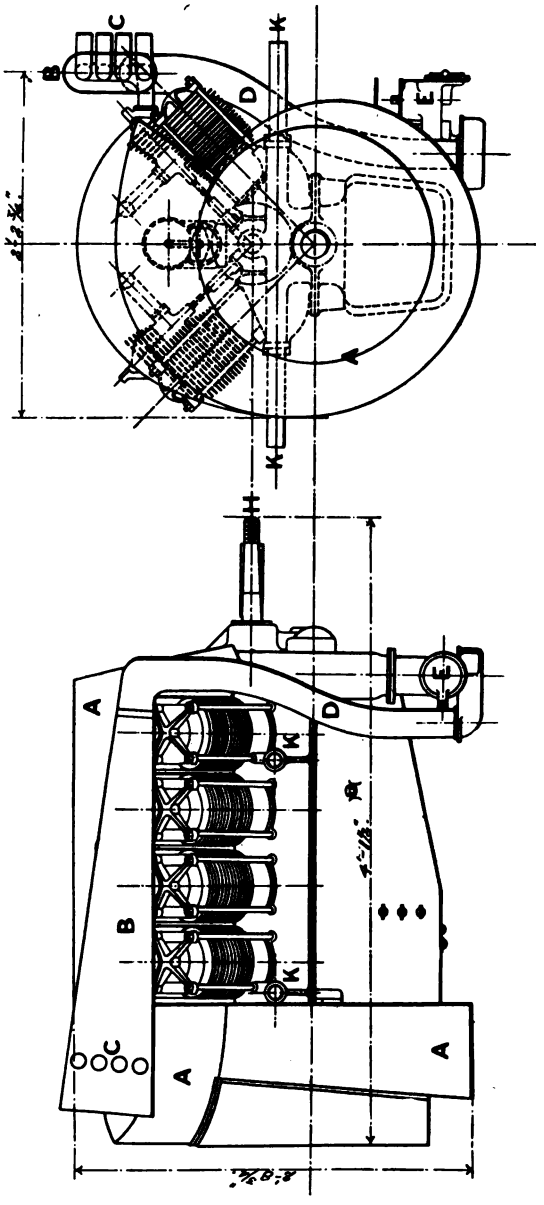

FIG. 42.—Diagram of air-cooled Renault "Vee" engine.

chamber above, from which the oil gravitates along suitable grooves formed within the crank-case to the various bearings, and into hollow rings on the crank-cheeks, whence the centrifugal action causes it to pass to the crank-pins; the exudation whirled from the big ends generally lubricates all other moving parts; the whole lubricating system is within the crank-case, and there are no external oil-pipes. Sufficient oil is contained in the sump for several hours' running; for exceptionally long runs an auxiliary tank is carried, which is connected up to the sump.

Ignition in the eight-cylinder designs is effected by a shield magneto giving four sparks per revolution of the shield, which is accordingly driven at crankshaft speed; in the twelve-cylinder engine, in order to keep the magneto speed from becoming excessive, two machines of the ordinary revolving armature two-spark type, carefully synchronised, are fitted, each supplying six cylinders. As six igniting sparks are required from each magneto per two crankshaft revolutions, the magnetos are driven at $\frac{6}{4}$, *i.e.* $1\frac{1}{2}$ times the crankshaft speed, and are thus run normally at 2700 revolutions per minute. The carburettor E is of the float-fed type, fitted with an adjustable heating arrangement to ensure correct vaporisation in damp and cold weather; the air is supplied through a conical trunk B and pipe D; the engine exhaust pipes are passed through this trunk, as shown at C, and thus warm the ingoing air.

The engine is attached to the frame of the aeroplane by means of two steel tubes K K, passing through the crank-case as shown in fig. 42.

The normal speed of the engine is 1800 revolutions per minute, but the propeller is mounted upon a prolongation, H, of the camshaft, this and its driving gear being made sufficiently stout to transmit safely the power of the engine. The normal propeller speed is accordingly only 900 revolutions per minute, which permits the use of a propeller of large diameter and high efficiency; on the other hand, the engine weight is somewhat increased by the heavier camshaft and gear involved, and there is a loss, probably of the order of 5 per cent., in the effective power due to the gear transmission; accordingly it is questionable whether there is any real advantage derived from this arrangement of the drive.

The Table hereunder gives some leading particulars of the air-cooled Vee-type Renault aero engines of 1914:—

LEADING PARTICULARS OF THE VEE-TYPE AIR-COOLED RENAULT AERO ENGINES OF 1914.

Nominal B.H.P.	No. of cylinders.	Bore in inches.	Stroke in inches.	Normal speed, revs. per min.[1]	Piston speed, feet per min.	ηp in lbs. per square inch. Eq. 32.	List price in £ per nominal B.H.P.[2]	Weight of engine in running order; lbs.		Over-all dimensions in inches.		
								Total.	Per nominal B.H.P.	Length.	Width.	Height.
40	8	2·96	4·73	1800	1420	77·8	8·50	211	5·3	30·0	27·0	23·0
50	8	3·54	4·73	1800	1420	59·3	8·40	375	7·5	48·5	26·5	25·5
70	8	3·78	5·52	1800	1656	62·4	6·86	396	5·7	45·5	29·8	32·8
100	12	3·78	5·52	1800	1656	59·3	6·80	638	6·4	56·3	32·3	39·5

The piston speed appears rather high for continuous heavy-load running, particularly in the 70 and 100 horse-power designs; the values of ηp from Eq. 32 are very low, no doubt on account of low volumetric efficiency due to the high speed and air-cooling; for the three types most largely used the average value is, roundly, only 60 lbs. per square inch; values of 90 to 100 lbs. per square inch, or even higher, are not uncommonly attained in many instances.

Messrs De Dion, so long famous for their high-speed motors, also build an eight-cylindered 3·94″ × 4·73″ air-cooled Vee aero engine of 80 B.H.P., running normally at 1700 revolutions per minute, with the propeller carried on the camshaft and accordingly running at only 850 r.p.m. The weight of this engine is 484 lbs., so that the weight per nominal B.H.P. has the high value of 6·05 lbs.

Messrs Panhard & Levassor build aero engines of both vertical and Vee type. Their 100 horse-power eight-cylindered 4·33″ × 5·52″ water-cooled design is illustrated in fig. 43.

The constructive arrangement and details do not depart much from good car-engine practice; thus each group of four cylinders, together with the water-jackets, is a single casting; the valves are side by side in pockets on the inner sides of the combustion chambers, and are direct-driven in the usual car-engine manner; and the pistons are of pressed steel with cast-iron spring rings.

The connecting-rods are of H-section in nickel-chrome steel; the crankshaft is also of this material, and is borne in white-metalled bearings housed in a crank-case of aluminium alloy. The

[1] The propeller runs at half this speed, viz. 900 revolutions per minute.

[2] Delivered at the gates of Messrs Renault's Paris works.

carburettor is placed beneath the engine, and long inlet pipes lead up to the valve chambers as shown in fig. 43.

The normal speed of the engine is 1500 revolutions per minute, but here also the propeller is carried on an extension of the camshaft, and thus normally runs at only half this rate. The weight of the engine complete with immediate accessories is 440 lbs., or only 4·4 lbs. per nominal B.H.P.; the radiator, piping, and water

FIG. 43.—Eight-cylinder 100 H.P. Panhard "Vee" engine.

weigh jointly 90 lbs., so that the engine in running order weighs altogether 530 lbs., or 5·3 lbs. per nominal B.H.P.

Among other Vee aero engines may be mentioned the Clerget, Laviator, Hall-Scott, Frontier, Curtiss, and those of the All British Engine Company (A.B.C.) and the New Engine Company (N.E.C.); a sufficient account of the type has, however, been given above. The next chapter deals with engines of the vertical type, which—especially in the six-cylindered design—received great attention during the period 1912–1914, and has been brought to a considerable degree of perfection, particularly in Germany.

CHAPTER VII.

VERTICAL AERO ENGINES.

In the evolution of the motor car the four-cylindered design of vertical engine has prevailed over all other arrangements; as used in car service it is always fitted with a flywheel, partly in order to reduce the cyclic speed fluctuation, and partly because its inner surface is in general utilised as one element of the clutch. In a relatively small proportion of cases the six-cylindered vertical engine is also employed in cars. It was accordingly inevitable that light four-cylindered vertical engines should be early proposed for use in the propulsion of air-craft, and reference to the Table of aero engines *circa* 1910 in Chapter III. shows the extent to which this type was at that time offered; of 76 engines in that Table, 24 are vertical, 22 of these being of the four-cylinder pattern.

Even at the end of 1912, in a list of 112 aero engines compiled by Graham Clark,[1] 42 were of the vertical type, 24 of these having four cylinders, 16 six cylinders, while there was one three-cylindered and one eight-cylindered design.

On the other hand, in the Paris Aero Show of 1913, of 57 engines exhibited, 8 only were vertical, 4 having four, and 4 having six cylinders; thus there was a great falling-off in the proportion of vertical engines. French and British aviators, as the result of experience, have generally formed the opinion that the four-cylindered vertical engine, even with the undesirable adjunct of a substantial flywheel, does not communicate to the air propeller a rotation of sufficient steadiness, and that excessive vibration of the whole machine, "fluttering," and even actual breakage of the propeller are much more frequent with this than with other types in which the cylinders are more numerous.

[1] *Proc. Inst. Auto. Eng.*, vol. vii.

Moreover, the largely increased power which experience has proved to be necessary for modern aeroplanes renders it impracticable to use only four cylinders, as the bore becomes so large that the cyclic fluctuation of speed is much increased, with resulting increased vibration and stress in the propeller and aeroplane generally.

The six-cylindered vertical design for long gave trouble in car work, mainly owing to crankshaft vibration and want of longitudinal stiffness; but these and other difficulties of the type have been fully surmounted, and the six-cylindered vertical engine came rapidly to the fore between 1912 and 1914 as a satisfactory motor for air-craft. Its long crankshaft and crank-case would seem to render it necessarily a somewhat heavier engine for its power than the short and compact Vee engine; on the other hand, being very narrow in end aspect, it offers very little obstruction to the view of the pilot, and its form being well adapted to a streamline form of casing reduces head resistance.

The six-cylindered vertical aero engine has been brought to a high degree of perfection in Germany, a list of 34 German standard aeroplanes in the summer of 1914 showing that no fewer than 31 were propelled by vertical engines, 17 of these being of six-cylinder and 14 of four-cylinder type.

The Wright Bros. Engine.—The four-cylindered vertical engine used by the Wright Brothers in their famous pioneer flying is of historic interest; designed and built in their own workshops, it was with one of these engines that mechanical flight was first practically achieved on 17th December 1903. The vertical engine of the Wright biplane of that date had four separate cast-steel cylinders, the combustion heads and valve pockets being included in the casting; the valves were on top and were interchangeable; the inlets were of the automatic type, while the exhausts were operated by push-rods and rockers. The jackets were of thin aluminium, and extended to the cylinder barrels only, the combustion heads being unjacketed. The steel connecting-rods were of tubular cross-section—a feature that appears also in the later Wolseley engines described in the previous chapter. A small rotary pump discharged the petrol through a small jet orifice placed in the bell-mouthed end of the inlet pipe, thus providing the "mixture." There were two propellers driven from the engine crankshaft by two sprockets and two chains; the engine sprockets were 9-toothed, while those

connected to the propellers were 33-toothed; thus the reduction of speed was as 1 : 3⅔.

The cylinder bore was 4·42″, and stroke 3·94″, with a normal speed of 1300 revolutions per minute; at this speed the engine developed 30 B.H.P. As the total weight was 210 lbs., the weight per B.H.P. was 7 lbs.

The Panhard Engine.—Messrs Panhard & Levassor have for some years built aero engines both of the Vee and vertical types; fig. 43 shows one of the former, while fig. 44 illustrates their four-

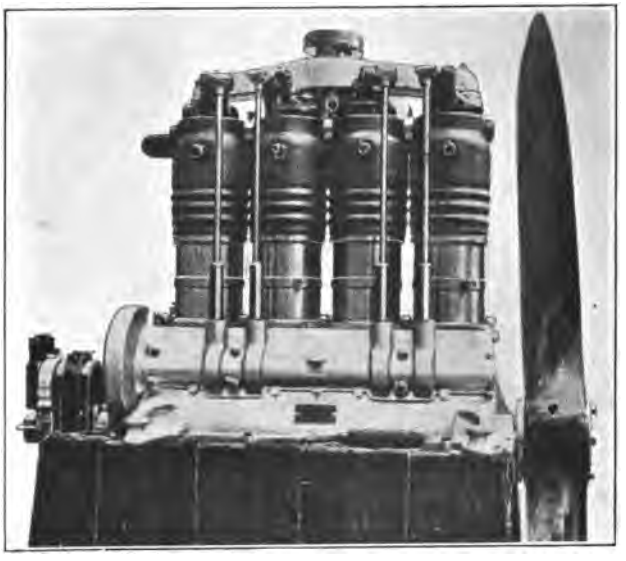

FIG. 44.—Four-cylinder 35 H.P. vertical Panhard engine.

cylindered 35 horse-power vertical design. The four cylinders are separate, and are cut out of solid steel billets; the combustion heads are of cast-iron; the bore is 4·33″, and stroke 5·52″.

The jacket walls are of thin corrugated copper soldered into grooves at the lower ends of the working barrels, and clamped by screws to the combustion heads; the water connection between adjacent cylinders is made by means of short abutting pipes covered by rubber rings held in place by steel straps. Freedom of expansion of the working barrels is thus ensured, while the relative small motion of adjacent cylinders can occur without any stresses being set up.

The pistons and rings are of cast-iron, very thin and light;

steel pistons were at first used, but, in common with several other builders, Messrs Panhard have reverted to cast-iron.

The crank-case is of aluminium alloy, and the crankshaft is borne in five bearings.

Valves.—The chief point of interest in the Panhard aero engine is found in the concentric inlet and exhaust valves, which are placed in the combustion head, and are coaxial with the cylinder; a diagrammatic sectional view of the arrangement adopted is given in fig. 45.

The exhaust valve, shown in black in the figure, is annular and has a trunk stem of large diameter, which forms the passage for fresh mixture to the inlet valve, the seat of which is formed in the back of the exhaust. The inlet valve spring is housed in the upper part of the exhaust valve trunk as shown, while the exhaust valve spring is external and visible, and stands on the casing carrying the combined valves.

Both valves are operated by one plus-and-minus cam, push-rod, and rocker, as in the case of the Wolseley engine already described.

In the left-hand view the piston is commencing its working stroke, and both valves are accordingly closed; in the top right-hand view the exhaust valve is open, and it is obvious how this is effected by the action of the plus portion of the cam. In the lower right-hand view the inlet valve is open; this is ingeniously effected by means of a small reversing rocker C swinging on a fulcrum pin carried in a bracket D formed on the exhaust valve spring washer E. An arm F from the main rocking lever H engages with the under side of the outer extremity of the small rocker C, so that when, by the action of the spring housed in the tappet-rod casing, the tappet roller descends into the negative portion of the cam the arm F is raised, thus depressing the inner end of C, which bears upon the end of the inlet valve stem, and so opens the valve.

The combined valve seems to have been first used in the "Pipe" petrol engines, and its use was continued in the air-cooled Vee-type aero engines built by the Pipe Co.; it enables valves of very large diameter and low lift to be used, and thus confers the advantage of a larger area for inflow and outflow of gas than can be obtained by separate valves in the cylinder head. Moreover, the exhaust valve head, which is usually the hottest part of the engine, is here replaced by the inlet valve, and the successive rushes of

fresh gas past this keep both the valves cool during running. It will be noted, however, that the mass to be moved is relatively

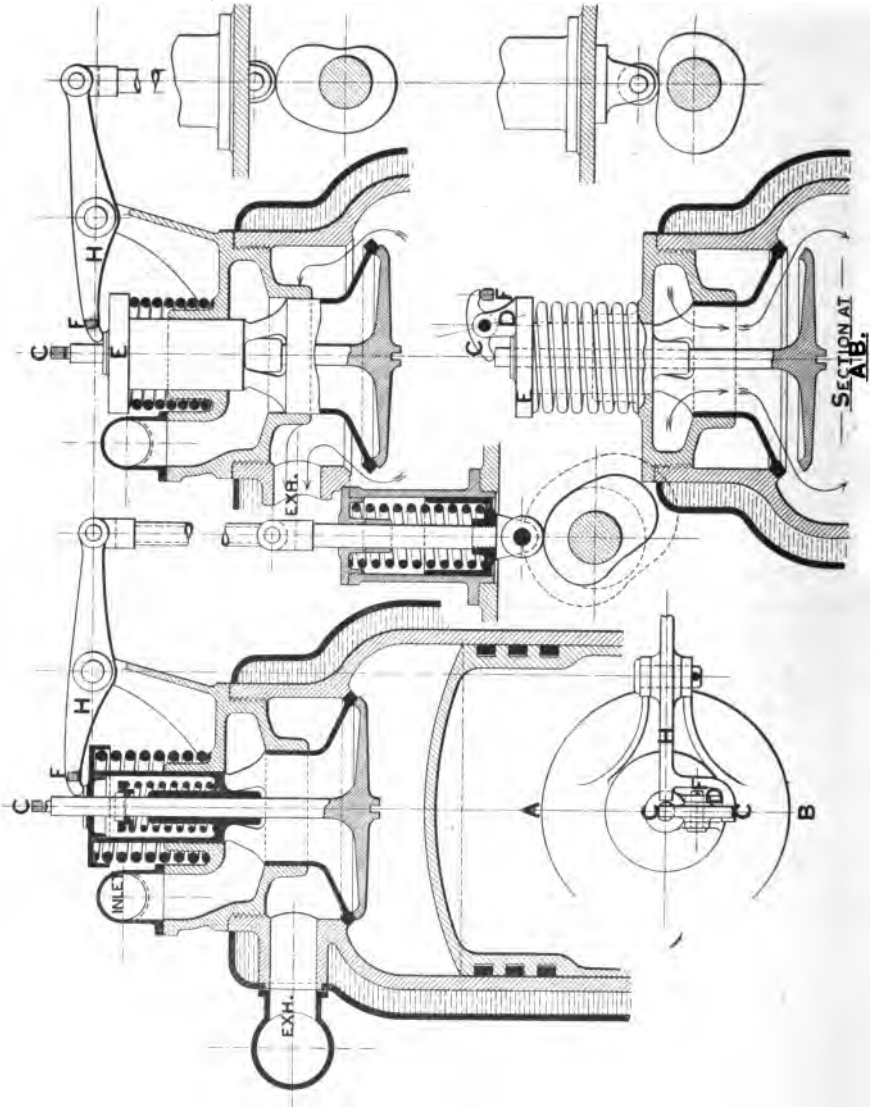

FIG. 46.—Valves and valve-operation of Panhard aero engine.

considerable when the exhaust valve is opened, as the whole combined device then moves as one rigid piece; the opening is effected by the positive action of the cam, but a strong and stiff spring is necessary to cause it to close with sufficient celerity. The inlet

valve, as in the case of the Wolseley engine, is opened by the spring housed in the tappet-rod box, and this spring has to be strong enough to overcome the resistance of the inlet valve spring, the inertia of the mass moved, and the internal friction of the mechanism. As Messrs Panhard have adhered to this mode of construction for some years, however, it may be concluded that in their hands, and at the speeds at which their engines are run, it yields satisfactory results in actual service.

On test, this 35 B.H.P. engine has been found to be capable of developing for several hours continuously 43 B.H.P. at, roundly,

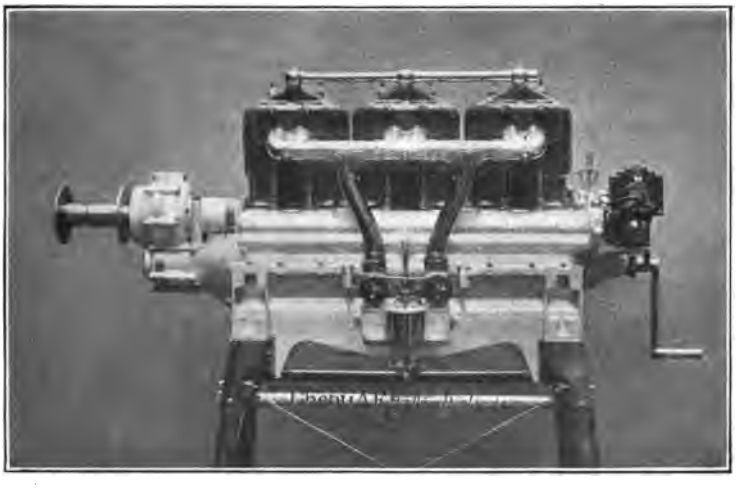

FIG. 46.—Six-cylinder 70 H.P. Chenu engine.

1100 revolutions per minute; from Eq. (32) the corresponding value of ηp is 95 lbs. per square inch, a high figure; the piston speed is only 1012 feet per minute. The petrol consumption is stated to be 0·52 lb. per B.H.P. hour at full load, corresponding, by Eq. (41), to a brake thermal efficiency of 24·5 per cent.

The weight of this engine, including magneto, carburettor, water pump, and piping, is 220 lbs., corresponding to $\frac{220}{43} = 5{\cdot}1$ lbs. per B.H.P.

The Chenu Engine.—An external view of the six-cylindered water-cooled 4·33″ × 5·12″ Chenu 70 horse-power vertical aero engine is given in fig. 46. The cylinders, complete with jackets, are of cast-iron, in pairs, and are supplied with gas by the two

carburettors shown; the valves are on one side, and not in the cylinder heads as is now so usual. The pistons are of pressed steel with cast-iron spring rings; the nickel-chrome steel crankshaft is borne in four white-metalled bearings carried in an aluminium alloy crank-case. The propeller shaft as illustrated is geared down from the crankshaft, but this speed-reducing gear may be omitted when desired.

A point of interest in connection with this 70 horse-power engine is its fine performance under tests carried out in the laboratory of the French Automobile Club, in respect of power development. At a speed of 1617 revolutions per minute, corresponding, by Eq. (33), to a piston speed of about 1380 feet per minute, the brake horse-power was no less than 99·7, corresponding, from Eq. (32), to the high value of ηp of 107·6 lbs. per square inch. That this was not accidental is shown by the test results obtained from a four-cylindered Chenu engine of the same type which furnished a value of ηp of 105 lbs. per square inch. The petrol consumption of the 70 horse-power engine amounted to 0·542 lb. per B.H.P. hour, the corresponding brake thermal efficiency, from Eq. (41), being 23·5 per cent.

The quantity of lubricating oil used was also very small, amounting to only 0·5 lb. per hour.

The engine had no flywheel; the weight complete with all usual accessories was 394 lbs.; the radiator, piping, and cooling water may be taken as a further 72 lbs., bringing the total weight of the engine in running condition to 466 lbs. This corresponds to 6·66 lbs. per nominal B.H.P., and about 4·7 lbs. only per maximum B.H.P.

The Austro-Daimler Aero Engines.—An external view showing the general arrangement of the six-cylindered vertical aero engine of the Austro-Daimler Co. is given in fig. 47, while fig. 48 is a part longitudinal view showing one of the carburettors and inlet manifolds, and also the valve-rods and rockers. These engines have proved very successful during the past four years, in both aeroplanes and dirigibles, and are in use in the air fleets of the British, Russian, Italian, Austrian, and German armies; they are now constructed in Great Britain by Messrs Beardmore of Glasgow.

A transverse section through one cylinder is given in fig. 49. The hollow crankshaft is of nickel-chrome steel, borne in seven

white-metalled bearings having exceptionally deep and stiff bearing caps, as shown. The propeller boss is fitted at the end of the shaft passing through an extension of the aluminium alloy crank-case about 12 inches in length, and is supported by ball thrust bearings;

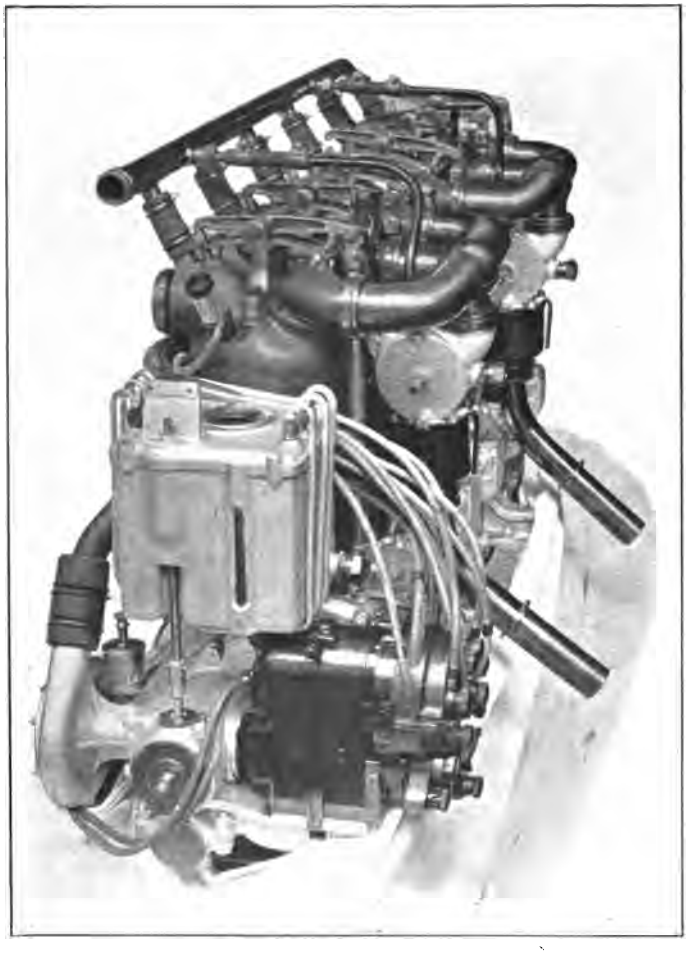

FIG. 47.—End view of six-cylinder vertical Austro-Daimler engine.

this extension permits a "stream-line" housing to be fitted conveniently at the "nose" of the aeroplane. The pressed steel connecting-rods are of the usual H-section, about 3⅓ cranks in length between centres, and are fitted with four bolts in each big end; the very light pistons are of pressed steel with three cast-iron spring rings.

The six separate cylinders are of cast-iron, the barrels being machined both within and without; a pressed steel flange AA (fig. 49) is screwed to the lower part of each working barrel, and this is attached to the crank-case by seven holding-down bolts, four of which are extended to form also main bearing bolts, whereby the crank-case is relieved of working stress, and can thus be built of light section.

The cylinders are offset or "desaxé" (see p. 77) by a distance C, equal to about one-fifth of the crank radius, thus reducing the connecting-rod obliquity, and hence the piston friction, during the working strokes.

The jacket cooling water is circulated by the small centrifugal pump at the back of the engine, as shown in fig. 47; the jacket walls are of electrolytically deposited copper, and, as will be seen from fig. 49, the water enters at the bottom of the jacket and leaves at the highest point in such a manner as to avoid any possibility of the formation of pockets in which steam or air might collect, while the exhaust valve seating and stem guide are both well cooled.

Lubrication is forced; a Bosch lubricator driven from the crankshaft through helical gearing contains a group of pumps, each of which delivers oil under high pressure to one weldless-steel main oil lead, as indicated in fig. 47. Each pump includes two small plunger rods of variable stroke, one of which acts as a piston valve, the other as a normal pump plunger.

Ignition.—Double ignition is fitted, *i.e.* there are two sparking plugs in each combustion head, placed at opposite ends of a diameter, as indicated in fig. 48; the igniting currents are supplied by two synchronised Bosch high-tension magnetos, each supplying one of the plugs in each cylinder.

When a position can be found for a second sparking plug in a cylinder where the freshly introduced charge is sufficiently rich to be readily ignitible, and the plug does not become oily or sooted up in working, the extra plug reduces the time of explosion (see p. 27) of the charge and increases both the power and efficiency of the engine, especially at high revolution speeds. It is not always possible, however, to find a satisfactory position for the extra plug, this being dependent upon the form and size of the combustion chamber, and the position and size of the valves; hence it has often been found that no perceptible advantage has resulted from the

adoption of double ignition. In other cases, however, a marked gain has been shown; in some experiments upon a four-cylinder Clement-Talbot engine by Dr. W. Watson, F.R.S.,[1] for example, the following results were obtained:—

Revs. per minute.	I.H.P. with single ignition.	I.H.P. with double ignition.
1100	18·4	20·8
1600	26·0	29·2

In the Austro-Daimler engine with two magnetos and two sets of plugs there is the further advantage of a reserve ignition in case of the failure of one of the systems.

Mixture.—The mixture is supplied, as shown in figs. 47, 48, 49, by two water-jacketed float-feed carburettors B B, identical in construction and adjustment, each supplying three cylinders through its own inlet manifold; the carburettors are simultaneously operated by the single control-rod shown; the floats are annular, and each carburettor is of the single spray nozzle type.

Trouble was experienced with early designs of six-cylindered car engines supplied by only one carburettor through the first and sixth cylinders frequently being starved on account of their distance from the carburettor; this trouble is overcome by the method here adopted.

With the usual order of firing, viz. 1, 4, 2, 6, 3, 5, it will be noted that not only do no two adjacent cylinders fire consecutively, but also that the working impulses occur alternately in one cylinder of each of the groups of three, so that in each carburettor the suction pulses occur at regular time intervals corresponding to 240° of crankshaft revolution, and upsetting of the mixture is thus prevented, and the action of each carburettor rendered uniform.

Valves.—The interchangeable cone-seated valves, each about one-half of the cylinder bore in throat diameter, are placed in the cylinder head, each with its axis at 30° to the vertical, as shown in fig. 49; the exhaust valve seating and stem guide are formed in the combustion head casting, and are well water-cooled. The inlet valve is borne in a separate casing, or cage, fixed in position by an easily removable hollow flange-nut C; on removing the inlet valve cage the exhaust valve can be withdrawn through the opening left.

Both valves are held to their seats by the neat and simple

[1] *Proc. Inst. Auto. Eng.*, vol. iii. pp. 388–9.

device of a single laminated spring D, clamped at its centre in the column supporting the fulcrum of the rocker, as shown in figs. 47 and 49. Both valves are also operated by one push-rod and rocker, but instead of the inlet being opened by the agency of a spring

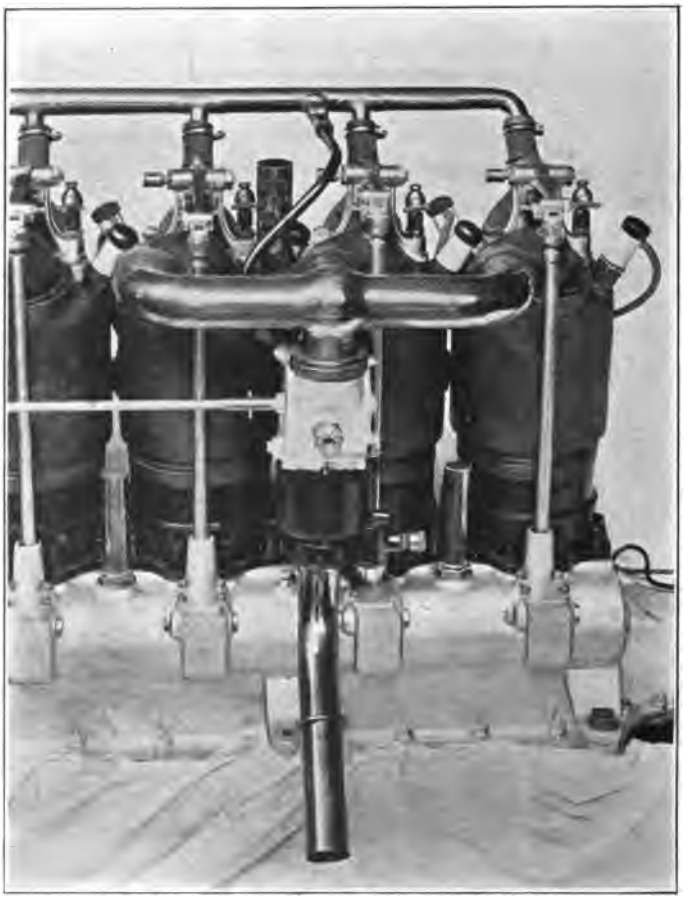

FIG. 48.—Six-cylinder Austro-Daimler, carburettor side.

housed in the tappet guide box, as in the early Wolseley and Panhard aero engines already described, the Austro-Daimler Co. have ingeniously contrived that both valves shall be positively opened by using two cams in conjunction with a bell-crank lever.

The arrangement is indicated in fig. 49; to the end H of the bell-crank lever HLK, turning upon the fulcrum L, the lower end

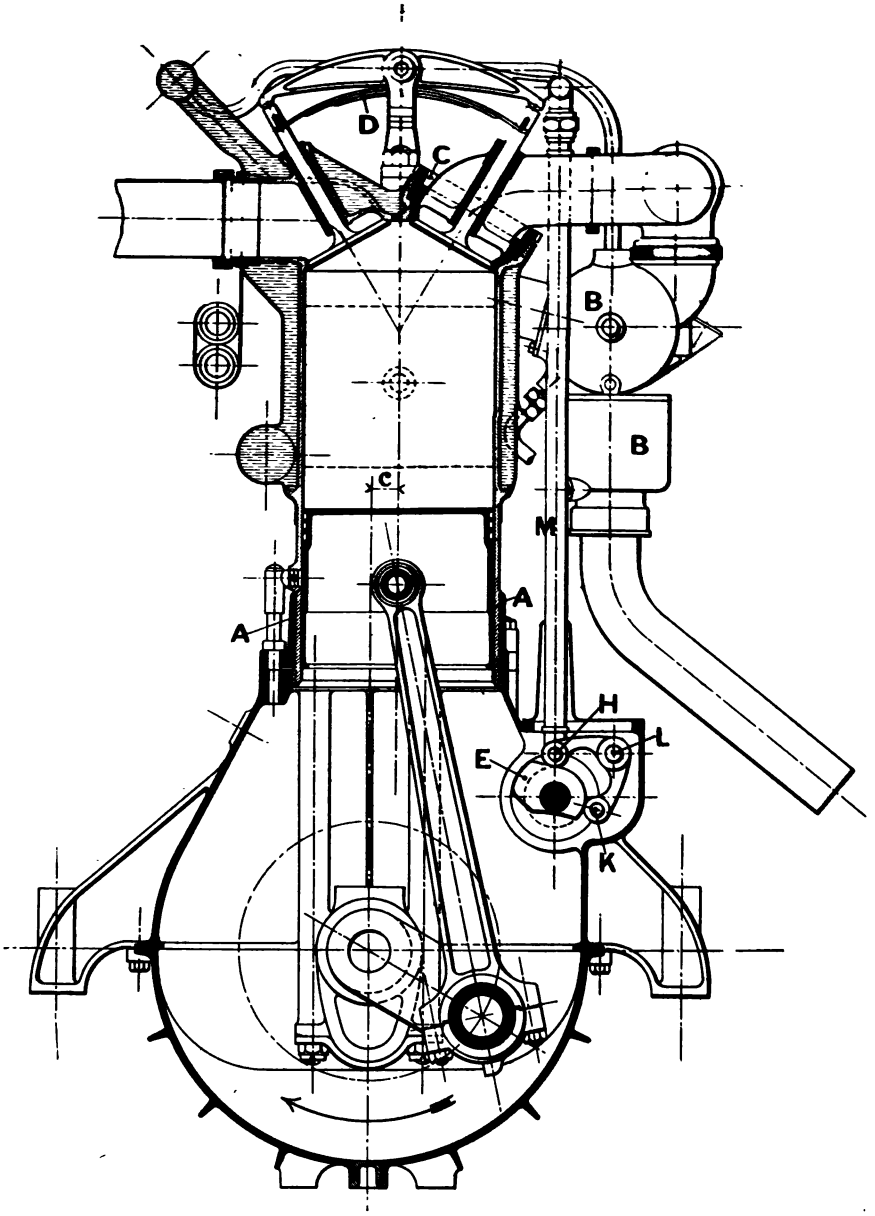

FIG. 49.—Sectional view of Austro-Daimler aero engine.

of the light tubular push-rod M is connected by a pin-joint. The arms of the bell-crank are, however, not in the same plane, LH being behind LK; the cam E actuates the rollered end K of the bell-crank, and when its +-part makes contact with K the push-rod M descends and the inlet valve is opened. Behind E is a second cam—not shown in fig. 49—by which the rollered end H is actuated; when the +-part of this cam makes contact with H the push-rod M rises and the exhaust valve is opened. The cams are necessarily cut away, or have a "minus" portion, in order that, when either end of the bell-crank is moving away from the axis of the cam-shaft, the other end may be free to approach this axis—as is obviously necessary.

Thus each valve is positively actuated, the masses moved are equal, the total mass to be moved is small, and the friction of the gear is reduced to a minimum.

General.—The six-cylindered aero engines of the Austro-Daimler Company are in two sizes, viz. (1) the $4{\cdot}73'' \times 5{\cdot}52''$ engine rated at 90 B.H.P., and (2) the $5{\cdot}12'' \times 6{\cdot}9''$ engine rated at 120 B.H.P.

Tests of a 90 H.P. engine made by the Austrian army authorities in 1913 included a run of twenty consecutive hours, at a speed of 1320 revolutions per minute, an output of just over 90 B.H.P. being maintained.

The 120 B.H.P. type runs normally at 1200 revolutions per minute, the corresponding piston speed (Eq. 33) being 1380 feet per minute. The effective valve diameter appears to be about 0·48 of that of the cylinder; hence in Eq. (50) we have $\frac{A}{a} = \left(\frac{1}{0{\cdot}48}\right)^2 = 4{\cdot}34$, and consequently $v = 6000$ feet per minute, a very satisfactorily low figure. The weight of the 120 H.P. engine, including the usual immediate accessories and *also* the radiator, is 575 lbs., corresponding to only 4·8 lbs. per rated B.H.P.

An output of 120 B.H.P. at 1200 revolutions per minute corresponds, by Eq. (32), to the high value of 93 lbs. per square inch for ηp. The petrol consumption is about 0·54 lb. per B.H.P. hour at full load, while the lubricating oil then used amounts to only some three-eighths of a gallon per hour; thus both in fuel and oil the engine is economical.

The Cody biplane to which the £5000 prize was awarded in the British military trials of 1912 was propelled by one of these

120 H.P. engines. It was also by aid of a 120 H.P. Austro-Daimler engine that Oelerich, at Leipzig in July 1914, climbed to the record height of 24,800 feet in an all-steel military D.F.W. biplane.

The Mercédès-Daimler Aero Engines.—These very successful vertical aero engines are made with four, six, and eight cylinders at Stuttgart, Untertürkheim, and are supplied in Great Britain by Messrs Milnes-Daimler-Mercédès, Ltd., of Long Acre, W.C.

The six-cylindered 100 H.P. design is specially favoured by German military airmen, and external views of this are given in figs. 50 and 51.

The water-cooled cylinders are cast in pairs, the jackets originally forming part of the casting, but latterly being of steel welded on; the cylinders are attached to the crank-case by flanges, studs, and nuts. The bore of the 100 H.P. engine is 4·73″, and the stroke 5·52″, and these engines develop 95 B.H.P. at 1200 revolutions per minute, rising to 105 B.H.P at 1350 revolutions per minute, the petrol consumption at full load averaging 0·55 lb. per B.H.P. hour. The piston speed at 1200 revolutions per minute is 1104 feet per minute, a moderate figure; while 95 B.H.P. at this speed implies, by Eq. (32), the very high value of ηp of 108 lbs. per square inch.

The weight of the 100 H.P. engine complete with two magnetos, water and oil pumps, piping, connections, propeller boss, and $1\frac{3}{4}$-gallon auxiliary oil tank, is 459 lbs., corresponding to only $\frac{459}{95} = 4{\cdot}83$ lbs. per actual B.H.P.

The pistons are of pressed steel with cast-iron rings, while the connecting-rods are of the usual H-section in nickel-chrome steel stampings. The nickel-chrome steel crankshaft is borne in white-metal bearings housed in an aluminium alloy crank-case, with large oil sump containing sufficient oil for a full-load run of six hours; for more prolonged runs a reserve oil tank is fitted. Lubrication is forced throughout, including the cam-shaft and rocker bearings. The propeller is attached to the coned and keyed end of the crankshaft, which issues from an extension of the crank-case as shown in figs. 50 and 51.

The valves are in the cylinder heads and are inclined; each valve is driven by its own rocking lever, these being directly actuated in the 100 H.P. design by cams carried on an overhead enclosed half-speed cam-shaft, driven by a vertical spindle through

FIG. 50.—Six-cylinder 100 H.P. Mercédès engine, exhaust side.

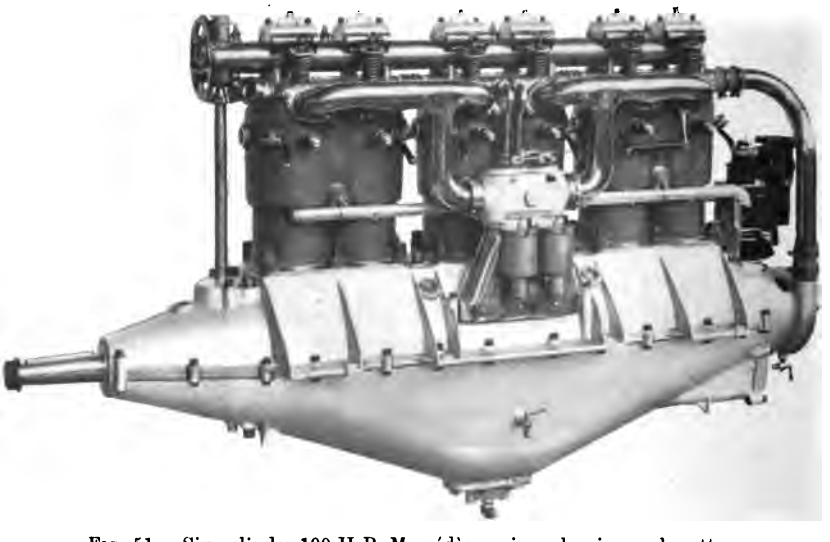

FIG. 51.—Six-cylinder 100 H.P. Mercédès engine, showing carburettors.

exposed bevel gearing from the propeller end of the crankshaft, as shown in the illustrations; this mode of valve operation has

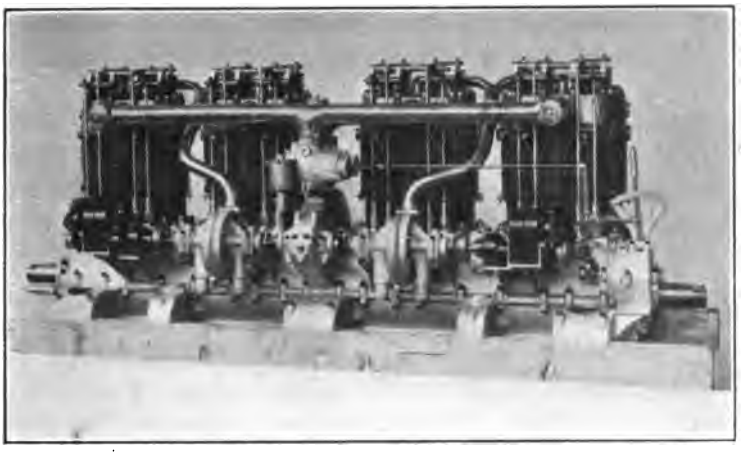

FIG. 52.—Eight-cylinder 240 H.P. Mercédès-Daimler engine.

proved extremely satisfactory, the mass to be moved in opening the valves being very small. Each rocker terminates in an adjust-

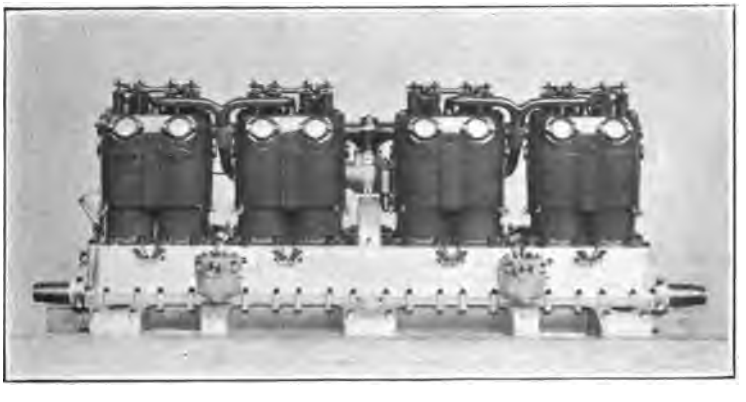

FIG. 53.—Eight-cylinder 240 H.P. Mercédès-Daimler engine.

able set screw and locking bolt, so that the necessary small clearance at the end of the valve stem may be accurately set.

Ignition is by two high-tension Bosch magnetos carefully synchronised; each cylinder—as in the Austro-Daimler—is fitted with two sparking plugs, and each magneto serves one plug in each

cylinder; the advantage of double ignition is thus obtained, in addition to a reserve ignition being provided.

There are two water-jacketed carburettors, clearly shown in fig. 51, each supplying mixture to three cylinders substantially as in the engine previously described (*q.v.*); the petrol is exhaust-pressure fed to the carburettors.

On 10th July 1914 Herr Bohm performed the remarkable feat of remaining in the air for 24 hours 12 minutes in an "Albatross" biplane driven by one of these six-cylinder 100 H.P. Mercédès-Daimler engines; though very light for their power, this very severe test amply demonstrates their durability.

Figs. 52 and 53 illustrate the eight-cylindered 240 H.P. Mercédès-Daimler engine as designed for the propulsion of dirigibles; here again the cylinders are in pairs, but the valves are shown as operated by push-rods and rockers. The following Table gives the leading particulars of these and the other Mercédès-Daimler aero engines of 1914:—

LEADING PARTICULARS OF THE VERTICAL WATER-COOLED MERCÉDÈS-DAIMLER AERO ENGINES IN 1914.

Nominal B.H.P.	No. of cylinders.	Bore in inches.	Stroke in inches.	Normal speed in revs. per min.	Piston speed in feet per min.	List price in £ per nominal B.H.P.	ηp in lbs. per square inch from actual B.H.P.	Weight of engine, excluding radiator. Lbs.	Weight in lbs. per nominal B.H.P.
70	4	4·73	5·52	1200	1104	5·50	102	308	4·4
80	6	4·13	5·52	1200	1104	6·06	111	312	3·9
90	4	5·52	5·92	1200	1184	5·67	99	400	4·44
100	6	4·73	5·52	1200	1104	5·85	108	444	4·44
120	4	6·88	6·49	1100	1190	5·29	89·5	660[1]	5·5
240	8	6·88	6·49	1100	1190	5·15	89·5	1820[1]	7·58

NOTE.—The first four engines develop only 60, 75, 85, and 95 B.H.P. respectively, at 1200 revolutions per minute.

The Green Aero Engine.—The Green Engine Co., Ltd., of London, has for the past seven years steadily adhered to the water-cooled vertical type of engine for aircraft propulsion, and has obtained several noteworthy successes, which have culminated in the gain of the £5000 prize for the performance of their 120 H.P. engine in the Naval and Military Aeroplane Engine Competition of 1914.

An external view of this successful engine from the carburettor

[1] When with flywheel, add 99 lbs. and 123 lbs. to these weights respectively.

side is given in fig. 54; it will be noted that the cylinders are separate, and connected to the crank-case by a flanged and bolted joint. The bore is 5½ inches and the stroke 6 inches, and 120 B.H.P. is developed at a speed of 1250 revolutions per minute, corresponding to a piston speed also of 1250 feet per minute, and a value of ηp of 89 lbs. per square inch. The weight of the engine complete with all usual accessories is stated as 440 lbs., corresponding to only 3·67 lbs. per full B.H.P. The Green aero engines are built by the Aster Engineering Co., Ltd.

A longitudinal elevation, partly in section, is given in fig. 55, while fig. 56 shows a transverse section and also an end view.

The Crankshaft.—The six-throw hollow crankshaft is of vanadium-chrome steel, 1·97 inches in external diameter and about 0·90 inch diameter internally; the six throws are arranged in the usual "opposed-three" manner, viz. with Nos. 1 and 6, 2 and 5, and 3 and 4 severally together, so that there is no "rocking" couple when the engine is running.

The crankshaft is very firmly supported in seven white-metalled main bearings of an aggregate length of about 16½ inches, carried in an aluminium alloy crank-case of exceptional depth and stiffness; moreover—as indicated in fig. 55—the holding-down bolts of the cylinders are continued through columns in the crank-case, so that their lower ends form the main bearing bolts; thus the tension due to the explosions is directly borne by these bolts, and the crank-case so far relieved from stress.

The crankshafts of vertical six-cylindered aero engines have given much trouble, not only from insufficient stiffness, but also from the frequency of fractures; in this design the shaft is very fully supported in an especially stiff crank-case, and it is of interest to apply Eqs. (48) and (49) (*ante*) to the case to ascertain the implied value of the constant C.

It will be found from Eq. (48) that $\Delta = 1{\cdot}93$ inches, and accordingly from Eq. (49) that $C = 0{\cdot}34$; Lloyd's rule for the crankshafts of the heavily worked engines of motor boats, when of the six-cylindered type with a bearing between each crank—the shaft being of ordinary mild steel,—is that C should have the value 0·36; in this case the special material employed has caused the builders to take a rather lower value for the constant.

The propeller thrust is resisted by the double ball thrust bearing A (fig. 55), situated near the left-hand end of the crankshaft.

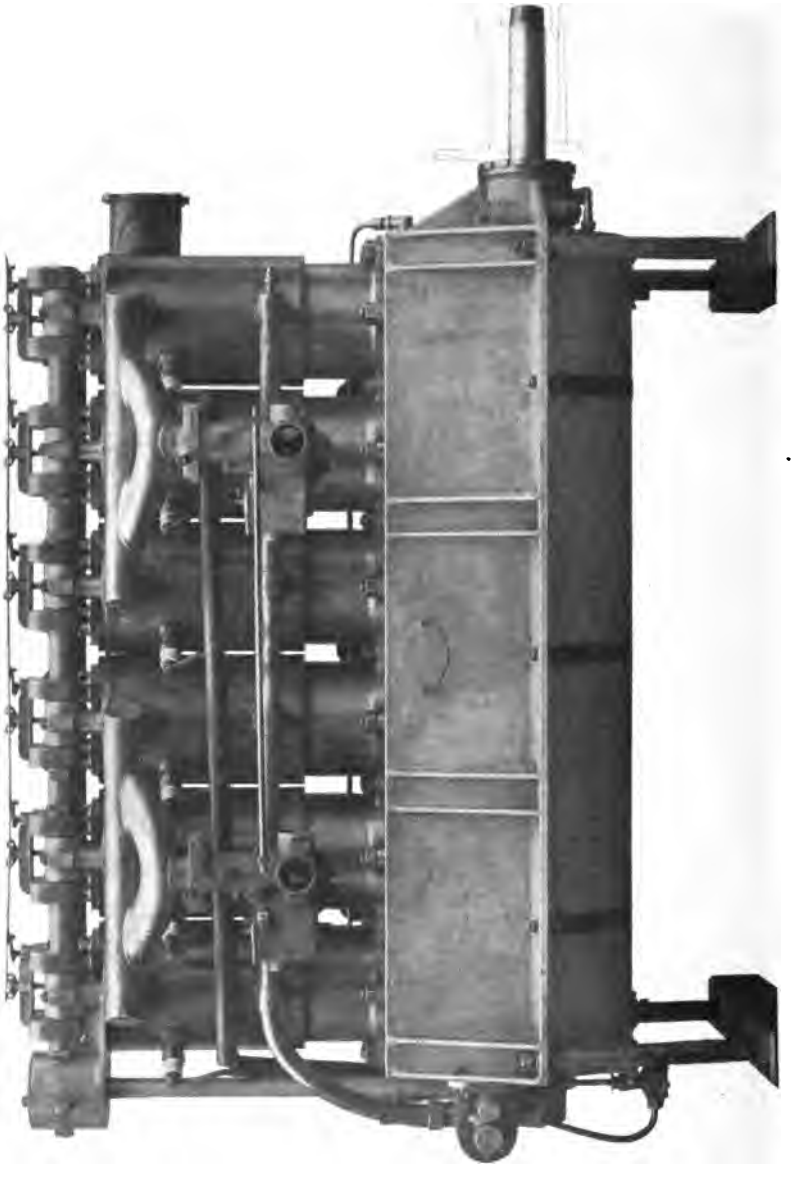

FIG. 54.—External view of six-cylinder 120 H.P. Green engine, showing carburettors.

The Flywheel.—At the propeller end of the shaft will be observed a flywheel bolted to a long-sleeved boss keyed to the shaft, and held in position by an end nut B. The flywheel has an external diameter of 19 inches, and the rim is 1·5 inches wide and

1·4 inches deep; the rim weight is accordingly about 30 lbs., and its rotational energy at 1250 revolutions per minute is about 4750 foot-lbs.

Oil is forced through the hollow crankshaft from the main bearings, and reaches the big ends through holes drilled radially in the shaft, as shown in fig. 55; this is a common but eminently undesirable practice, as the sections of the shaft in which these holes occur are much weakened.

The Connecting-rods.—The connecting-rods are nickel-chrome steel stampings of H section, with the webs drilled out in order to reduce their weight as much as possible, and of a length between centres, roundly, $3\frac{3}{4}$ times the crank radius. The big ends are white-metalled and of very light design; each has two cap bolts; each big-end bearing is 1·97 inches diameter and 2·75 inches long, the corresponding "bearing area" being $1{\cdot}97 \times 2{\cdot}75 = 5{\cdot}4$ square inches. Assuming, as usual, an explosion pressure of 300 lbs. per square inch, this corresponds to, roundly, 1300 lbs. per square inch of bearing area—a normal pressure intensity in the petrol engines of cars.

In the gudgeon end the unusual practice is adopted of firmly attaching the connecting-rod to a hollow steel gudgeon pin, and making the working joint between this pin and the two bronze-bushed piston bosses; in the very great majority of petrol engines of all kinds the pin is fixed in the bosses, and the working joint is between the pin and the bushed eye of the connecting-rod.

Each gudgeon pin is about 0·95 inch in diameter, and the joint length of the two bearings in each piston is 2·6 inches; hence, proceeding as above, it appears that, due to the explosion pressure, there is a momentary maximum of 2900 lbs. per square inch of bearing area on the gudgeon pin—again a normal value.

Pistons.—The pistons are of cast-iron with dished crowns—which is not a very usual practice, though it is found in the Daimler-Knight sleeve-valve engines, and has recently been adopted also in the latest design of single-valve Gnome engine (*v. infra*); it is sometimes claimed to be theoretically good as causing the combustion chamber to approximate more nearly to a spherical form, thus giving maximum volume with minimum cooling surface, and sometimes it is merely said to keep the cylinder cleaner by holding any dirt or loose scale that may form on and drop from the combustion chamber. Each piston is furnished

with three cast-iron spring rings, and has a length of 4·9 inches, *i.e.* 0·9 of the cylinder bore.

Cylinders.—The six slightly offset cylinders are all separate, and each is attached to the crank-case by a flanged joint with four bolts, which are extended downwards to form also the main bearing bolts, as already stated; there is also a fifth stud and nut standing in the crank-case. The cylinders are here of cast steel, machined within and without, the finished thickness of the working barrel being about 0·17 of an inch. From the flat cylinder top two cylindrical branches C C project vertically upwards; into these the inlet and exhaust valve cages are respectively fitted; as shown at D D, these two branches slightly overlap the working barrel, so that, in the event of a valve stem breaking, the head of the valve is unable to fall into the cylinder; risk of fracture of the piston crown is thus avoided.

Cylinder Jackets.—The jacket walls E E are of very thin spun copper, making a metal-to-metal joint with the top of the cylinder, while at the lower end watertightness is preserved and expansion permitted by a rubber ring F F placed in the recess between two small flanges left on the working barrel as shown. The copper jacket is slightly belled out at its mouth and firmly pressed over the rubber ring; a very effective and permanent water-joint is thus secured, and it has been noted that after some time the jacket wall even bulges slightly outwards, owing to the pressure exerted upon it by the rubber ring; the width of the water space around the cylinder is only about 0·3 inch.

The cooling water is circulated by the pump G, shown in the right-hand view in fig. 56; this pump is driven from one end of a horizontal shaft operated by skew gear wheels H (fig. 55); to the other end of this shaft is attached the high-tension ignition magneto K. The pump draws from the radiator and delivers into the horizontal pipe L, with which the bottoms of the several cylinders are connected by short branches M; the heated water leaves the jackets at the top by means of the branches N to the pipe P, and thence returns to the radiator.

Each cylinder develops, roundly, 20 B.H.P. at full load; assuming, as in Chapter II. (p. 41), a rise of 40° F. in the jacket-water temperature, this involves the passage of 20 pints, *i.e.* $2\frac{1}{2}$ gallons of water through each cylinder jacket per minute, and the pipes L and P accordingly have to pass a maximum of $6 \times 2\frac{1}{2} = 15$ gallons

[*To face page* 140.

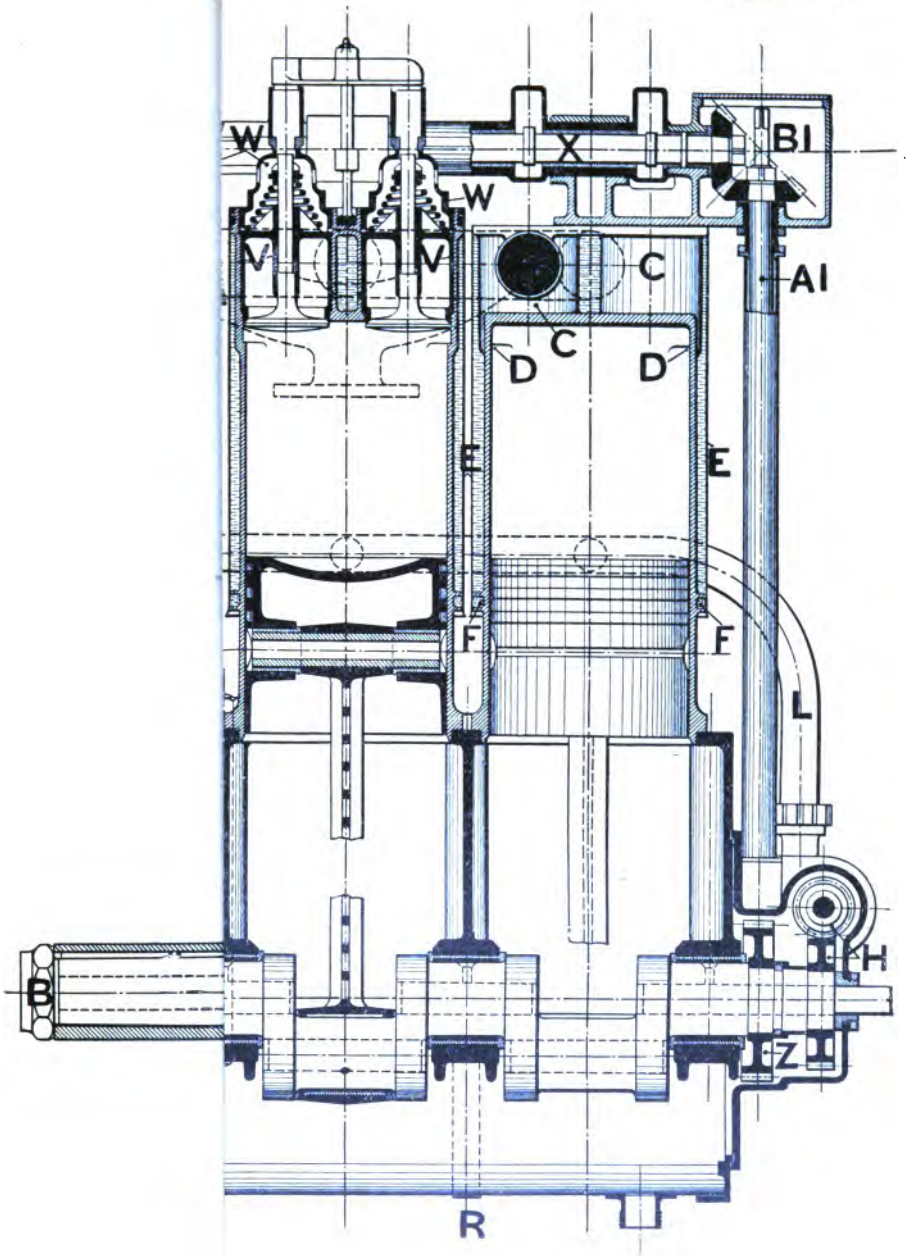

of water per minute. As these pipes have an internal diameter of about 0·95 inch, the mean velocity of the water through them is, roundly, 8 feet per second.

The Crank-case.—The upper half of the crank-case, to which the cylinders are bolted, is an exceedingly deep and strong casting of aluminium alloy having stiff transverse webs supporting the seven main bearings, as shown in figs. 55 and 56. The lower half is an extremely light and simple semicylindrical cover of thin sheet aluminium held up by the three easily removable straps R R R.

Lubrication.—Lubrication is forced to the main bearings and big ends; the small gear-pump S (fig. 56), drawing from the crank-case sump, delivers oil at a pressure of about 20 lbs. per square inch to the passage T cored in the wall of the aluminium crank-case casting, which communicates by ducts in the transverse webs and down the bolt columns with the main bearings as indicated. From the main bearings the oil has to pass *inside* the crank-shaft—in opposition to the centrifugal force—and along *via* the crank-cheeks, to the crank-pins, whence it issues through the oil-holes indicated in fig. 55, and lubricates the big ends.

The gudgeon bearings and pistons are lubricated by the oil whirled from the cranks. The cams and cam-shaft are supplied with oil-bath lubrication as mentioned later.

Carburation.—The working charge is supplied to the cylinders by two Zenith carburettors carefully adjusted to be exactly alike, and with their throttle-valve levers coupled together as shown in fig. 54. Each connects to a three-branched inlet manifold. The Austro-Daimler and Mercédès-Daimler aero engines already described similarly employ two carburettors, and reference may be made to p. 129 for a remark upon the advantage obtained by this practice. The burnt gases are led by short branch tubes into a long expanding exhaust pipe U, as shown in figs. 55 and 56.

Ignition is effected by the single high-tension magneto shown in fig. 56A at K.

Valves.—Both inlet and exhaust valves are carried in cages V, and are in every respect identical, thus reducing the necessary stock of spare parts. The valves themselves are 45° cone-seated, of nickel-chrome steel, with a throat diameter of 2⅛ inches, *i.e.* 0·386 of the cylinder bore; applying Eq. (50) (*supra*), it will be found that the mean velocity of the gas through the valve throat is, roundly, 8400 feet per minute when the engine speed is 1250

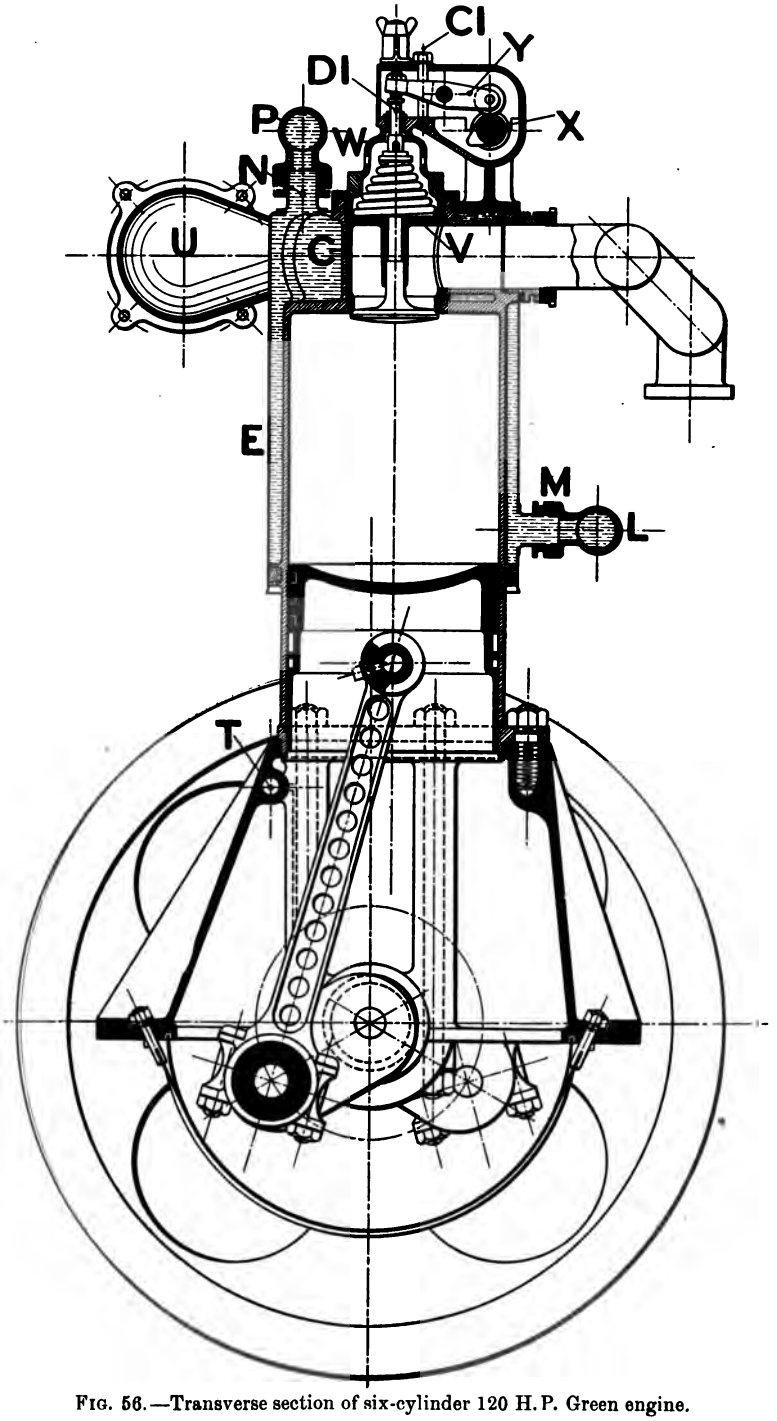

FIG. 56.—Transverse section of six-cylinder 120 H.P. Green engine.

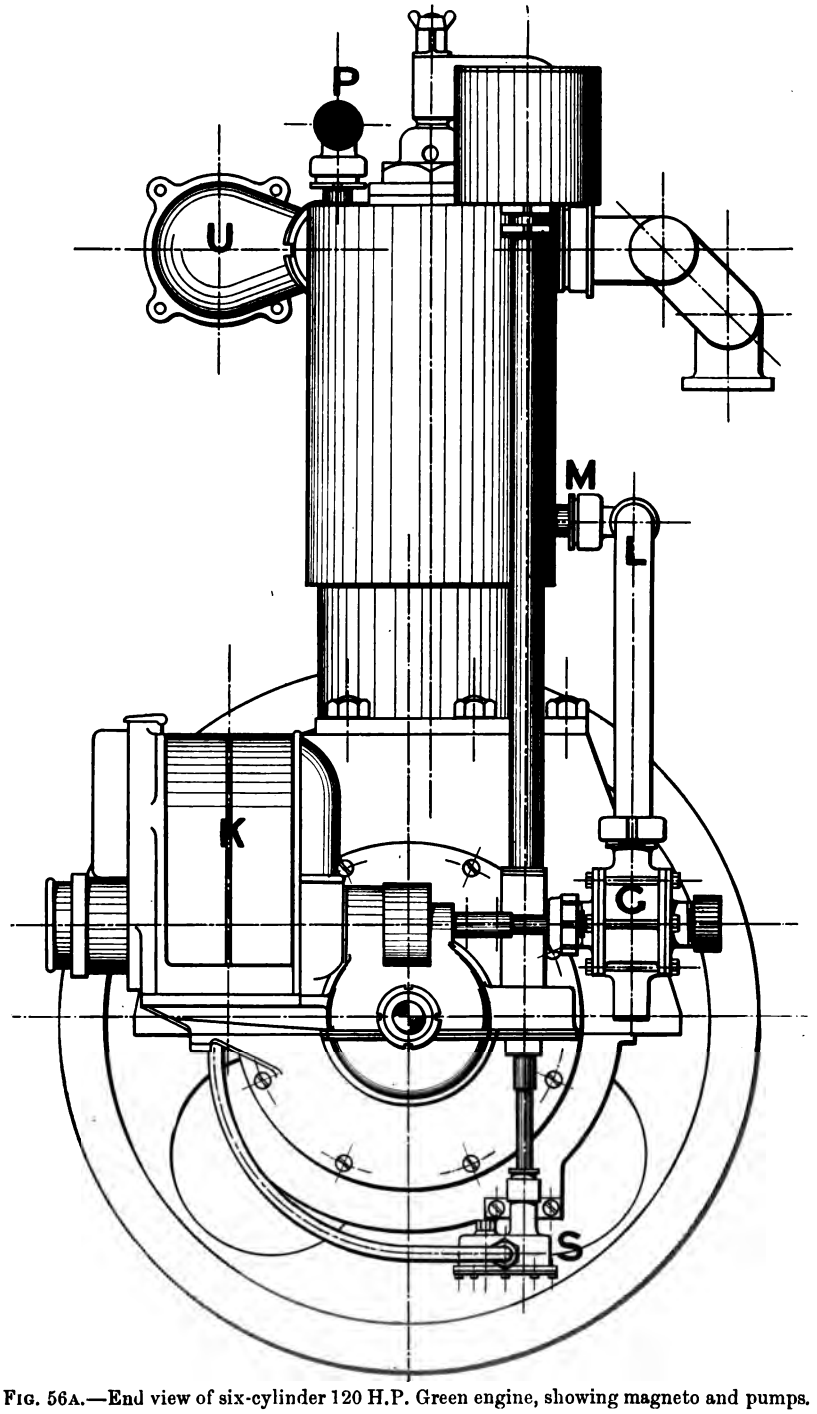

FIG. 56A.—End view of six-cylinder 120 H.P. Green engine, showing magneto and pumps.

revolutions per minute; this is rather high compared with the 6500–7000 feet per min. of car engines of good output, and is probably a cause of the not notably high value of ηp, viz. 89, which is attained.

Each valve cage makes a ground-in cone-seated joint near the bottom of the cylinder trunk C, in which it is fitted, and is secured in place by a large hollow aluminium nut W. The valve springs are conical helices giving less accumulation than the usual helical type; it will be seen that as arranged they are protected completely from any contact with hot gases and are kept cool by fresh air entering the ventilating holes in the domed aluminium nuts W. Both valve seats are well water-cooled, and the inlet and exhaust passages are short, direct, and free from obstruction.

Valve Actuation.—The valves are operated by an overhead cam-shaft X through small rockers Y; these rockers do not act directly upon the ends of the valve stems, but through an intermediate tappet, or pin, DI (fig. 56). The cam-shaft is driven by skew gear Z on the right-hand end of the crankshaft, through a vertical shaft AI and bevel gearing BI; both these gears, as also the vertical shaft, cam-shaft, and rockers, are encased completely.

The aluminium casing of the cam-shaft is clearly indicated as to detail in figs. 55 and 56, and is arranged so as to be taken apart readily when required; the upper cover carries the fulcrum pins of the rocking levers, while the lower part forms an oil-bath into which the cams dip at every revolution. The cam-shaft casing is in three lengths, each borne on two supports from the cylinders; these lengths are split longitudinally into two parts and are fitted with a total of seven split bronze bushes, so that the cam-shaft is very rigidly carried; the two parts of the casing are held together by screws CI, one of which is shown in fig. 56.

Valve actuation by overhead shaft in this way is an excellent method, as most of the moving masses are rotating, and there are no long push-rods and large rockers to be accelerated, while the whole gear is completely enclosed and thus protected from dust and accident; the system has given exceedingly satisfactory results in practice.

The Inverted Daimler Engine.—Though the vertical type of aero engine causes but little view-obstruction to the pilot, attempts have yet occasionally been made to still further reduce this; for example, in the German aeroplane motor competition at the Adlershof Institute in 1913, the German Daimler Co. entered the

four-cylindered water-cooled *inverted* vertical engine illustrated in fig. 57; this engine underwent the various tests so satisfactorily that it was awarded the fourth prize, the judges expressing the view that it was of "an original and suitable design for flying machines." The engine was rated at 70 B.H.P., the cylinder bore being 4·73″, the stroke 5·52″, and the normal speed 1400 revolutions per minute. The cylinders were cast in pairs and the valves were situated in the combustion heads, each being actuated by its own

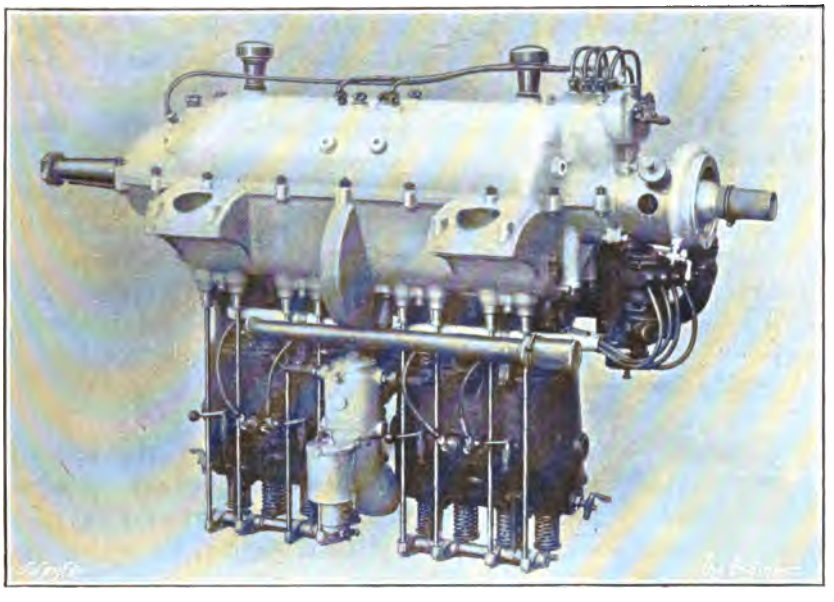

FIG. 57.—Four-cylinder 70 H.P. inverted aero engine of the German Daimler Co.

cam, push-rod, and rocker as shown; the inverted position conferred the advantage that the cooled water from the radiator could enter the combustion head jackets first. The lubrication was forced; the practical difficulty anticipated with the inverted arrangement was that lubricating oil would pass the pistons and soot up the valves and plugs, but no trouble from this cause was experienced during the trials.

The inverted position of the cylinders has for some years been a feature of the small engines constructed for motor boat propulsion by the Seal Motor Co. of Hammersmith, and thus was not an entirely novel arrangement; in the radial type of aero engine also,

examples of which have already been described, the lower cylinders necessarily work in a more or less inverted position, and such engines have proved quite successful in practice.

In this German competition the importance of low weight per B.H.P. was adequately recognised; the value figure taken for purposes of comparison was a fraction having as numerator the weight of the engine, including its attachments to the aeroplane, operating levers, flywheel (if any), propeller shaft and bearing, and the weight of the cooling water, petrol, and oil used; the weight of the propeller itself was not included.

The actual weight of the petrol and oil tanks was not included, but a uniform allowance was made for these items of one-fifth the weight of (petrol+oil) consumed during the seven hours' trial. Similarly, the actual radiator weight was not taken, but was assumed at about 0·68 lb. per 3000 B.Th.U. carried off by the cooling water per hour; this corresponds, roundly, to about 0·68 lb. per B.H.P. of normal output of the engine.

The denominator of the fraction was the B.H.P. developed during the full-load test; thus:

$$\text{Value figure for comparison} = \frac{\text{Weight as above determined}}{\text{B.H.P.}}.$$

Estimated in this way, the engine weights per B.H.P. appear, of course, somewhat high, as so much more than usual is included in the engine weight. The first prize was awarded to a 100 H.P. four-cylindered water-cooled vertical Benz engine, for which the several items of weight were as follows:—

	Lbs.
Engine with usual immediate accessories . .	345
Allowance for petrol and oil tanks and radiator	104
Allowance for water, fuel, and oil . . .	354
Total . .	803

This engine is illustrated in fig. 58. The cast-iron separate cylinders were of 5·13″ bore, the stroke being 7·1″; the mean speed during a seven hours' full-load trial was 1288 revolutions per minute, corresponding to a piston speed of 1525 feet per minute; the brake horse-power developed was 102·7, corresponding to the high value of 108 lbs. per square inch for ηp. The fuel consumption was very low, amounting to only 0·465 lb. per B.H.P. hour, the

corresponding brake thermal efficiency being $\frac{2545}{0{\cdot}465 \times 20{,}000} = 27{\cdot}4$ per cent. The lubricating oil used was almost exactly half a gallon per hour, so that the performance of this engine was highly creditable in all respects.

As the total estimated weight was 803 lbs., and the B.H.P. 102·7, the value figure for this engine was $\frac{803}{102{\cdot}7} = 7{\cdot}82$ lbs. per

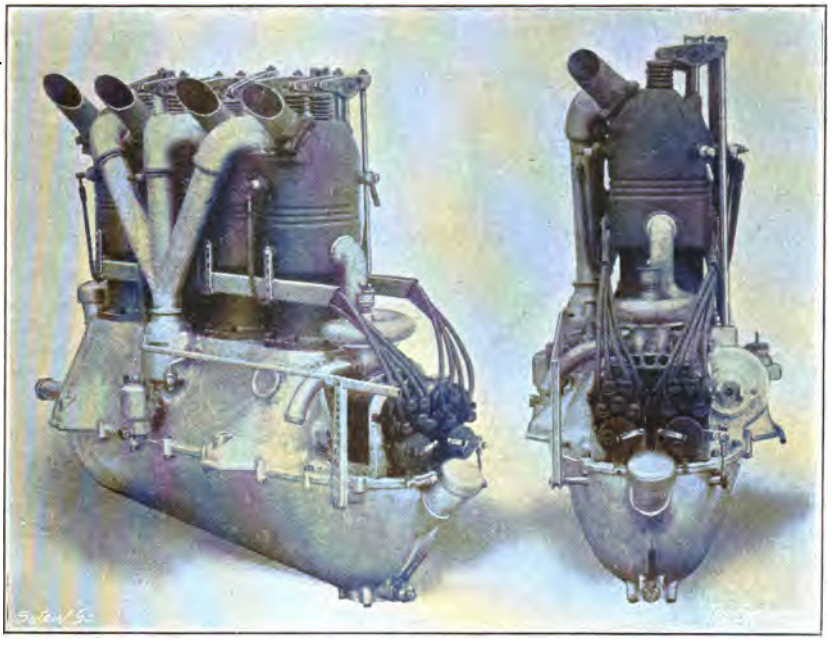

FIG. 58.—Four-cylinder 100 H.P. Benz engine.

B.H.P.; it will be noted, however, that in the common mode of reckoning, *i.e.* taking only the weight of the engine with immediate accessories, the figure has the low value of $\frac{345}{102{\cdot}7} = 3{\cdot}36$ lbs. per B.H.P. only.

The jacket walls were of welded sheet steel, partly corrugated, with water inlet and outlet at opposite ends of a diameter, the water joint between adjacent cylinders being made by a compressed rubber ring.

It will be noted from the illustration that the carburettor body

was cast in one with the upper part of the crank-case, and the air used was drawn from the crank-chamber, as in some cases already described, thus helping to cool the working parts, and also ensuring a supply of warm air for carburation; the carburettor was water-jacketed.

The valves were located in the cylinder heads and driven by the usual overhead gear; each valve was fitted with two springs, one being a reserve in case of failure of the other.

Double ignition was provided, as in the Austro-Daimler and Mercédès engines already described; each cylinder was fitted with two sparking plugs; there were two high-tension magnetos carefully synchronised, each supplying one plug of each cylinder; these magnetos are shown in fig. 58.

In this German competition 66 engines were entered, 52 of these being water-cooled and 14 air-cooled; many failed to appear, but ultimately 18 underwent the main trial, only one of these being of the air-cooled type; finally 10 engines, all water-cooled, underwent extra trials.

The following average results from the performance of the five prize-winning engines during the seven-hour full-load test are of interest, and illustrate the remarkable advance made in lightness of construction and economy in petrol and oil consumption:—

	Lbs. per B.H.P.
Weight of engine and immediate accessories . .	3·74
„ estimated as above described . . .	8·6
Lbs. of petrol per B.H.P. hour	0·494
„ of lubricating oil per B.H.P. hour . . .	0·05

While a four-cylindered vertical engine to which the third prize was awarded was undergoing its trial the propeller broke, one blade flying off and damaging the roof of the testing-house. This breakage may or may not have been due to want of sufficient cyclic speed regularity in the engine, but probably created an unfavourable impression among airmen, an objection frequently urged against the four-cylinder vertical engine being that propeller failures are more frequent with them than with engines of the rotary or radial types. It seems probable that the four-cylindered vertical aero engine, by reason of its somewhat irregular torque and practically limited power output, will be little, if at all, used for aeroplane propulsion in the future. On the other

hand, recent improvements in the design of the water-cooled six-cylindered vertical engine, especially in the direction of greater stiffness and absence of crankshaft torsional oscillations at high speeds, render it very probable that this type of engine will enjoy a considerable vogue in normal aeroplane service requiring from 75 to 150 B.H.P.

CHAPTER VIII.

ROTARY AERO ENGINES.

In general, rotary aero engines in external appearance resemble those of the radial type already described in Chapter V.; but whereas in radial engines the cylinders are stationary and the crankshaft rotates, in rotary engines the crankshaft is *fixed* and the cylinders, crank-case, and attachments rotate around the crankshaft axis.

The rotational inertia of this type of engine is thus very considerable, and the angular motion of the propeller accordingly very uniform; this uniformity of motion is, moreover, attained with a very light engine, no flywheel being needed, while the rapid motion of the cylinders increases the effectiveness of the air-cooling. To the skill and enterprise of M. Laurent Seguin, the designer of the famous "Gnome" rotary aero engine, aviation owes a great debt of gratitude; the demand of the pioneers of mechanical flight for a very light smooth-running engine was promptly met by the well-designed and beautifully constructed Gnome engines, which very early attained great popularity, particularly among British and French airmen.

Extremely useful though the rotary engine has proved, largely by reason of its lightness and the steadying influence of its large rotational inertia, it must yet be borne in mind that its advantages in these respects are enjoyed only at the cost of certain drawbacks. Thus it must be necessarily air-cooled, though there is little doubt that, especially for prolonged flights, a water-cooled engine is preferable; again, the resistance of the air to the rapid rotation of the cylinders absorbs fully 10 per cent. of the power developed, while it is difficult to provide for the uniform cooling of the cylinders and so avoid distortion, the leading surfaces tending to

keep cooler than the following surfaces. It has also proved difficult to arrange satisfactorily for the supply of the carburetted "mixture" to the several cylinders of rotary-type engines, while it is almost impossible to devise any practical means of silencing the exhaust. Lubrication, again, has proved a difficult problem, a solution often adopted being to make up by a profuse supply for a defective system, with the result that the oil consumption frequently proves to be inordinately large. Lastly, to prevent overheating, the largest practicable air-cooled cylinder is of not exceeding 5″ in bore, so that high power is only attainable by increasing the number of cylinders, with corresponding increase in number of parts and general complexity.

These drawbacks notwithstanding, it is undoubted that the rotary engine is very popular, and this popularity has been earned partly by its early success in the field of aviation, and partly by the many and continuous improvements which have been effected in the details of its design, as experience has accumulated, by its skilful constructors.

The Gnome Engine.—One of the earliest designs of Gnome engines comprised but five cylinders, each of 3·94″ bore and equal stroke; the demand for higher power caused this soon to be superseded by the famous seven-cylindered 50 H.P. type, front and side external views of which are given in figs. 59 and 60. From the side view, fig. 60, it will be seen that the fixed hollow crankshaft carries at its inner end a simple form of carburettor from which the explosive mixture is conveyed to the several cylinders by way of the crankshaft and crank-case, as described more fully later.

The seven symmetrically disposed air-cooled cylinders, together with the crank-case and propeller, rotate about the axis of the fixed crankshaft; the seven connecting-rods rotate around the fixed crank-pin, and are accordingly eccentric to the cylinders, twice the eccentricity being the amount of the piston stroke.

The rotation of the cylinders is caused by the side pressure of the pistons on the working barrels arising from the obliquity of the connecting-rods during the running of the engine.

Fig. 61 shows a longitudinal section through one cylinder, the crank-case, and the fixed crankshaft of the seven-cylindered 60 H.P. Gnome engine.

The Crankshaft.—The nickel-chrome steel fixed crankshaft is in two parts, A and B; these are connected together at the crank-

pin by a carefully fitted joint, partly coned and partly cylindrical, as shown, the two parts being held together by the nut C, which is itself locked by a set-screw and plate; relative angular movement of the hollow and solid elements of the crank-pin is prevented by the taper pin D; this separation of the crankshaft is necessary to

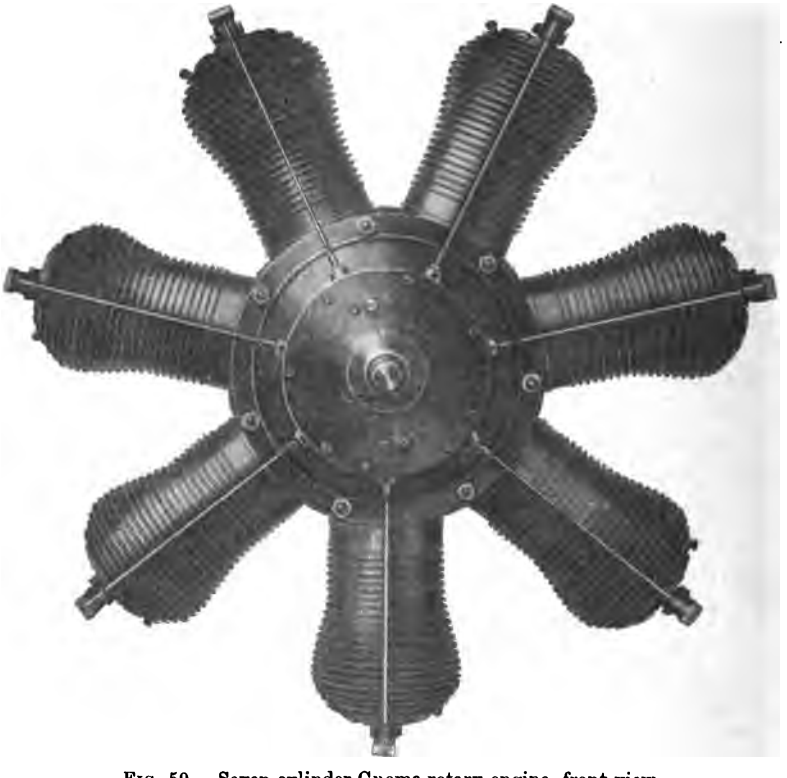

FIG. 59.—Seven-cylinder Gnome rotary engine, front view.

enable the two large ball bearings EE and the cage FF carrying the "big-end" pins to be placed in position.

The crankshaft is a thin tube firmly fixed to two plates GG, HH, of the aeroplane frame by the light steel castings KK and LL; the driving torque reaction is positively resisted by the key M; in the design shown, the engine and propeller are thus overhung.

Connecting-rods.—The seven nickel-chrome steel connecting-rods are of H section; one of them, $3\frac{3}{4}$ cranks in length between

centres, styled the "master-rod"—shown at N,—is in one piece, and thus rigid with the cage FF which carries the six hollow steel pins P, P, . . . to which the "big ends" of the remaining six rods are attached; these pins P are prevented from turning in the cage by "snugs" as shown. The arrangement of the seven rods is clearly shown in the "section at XY" on the left-hand side of fig. 61.

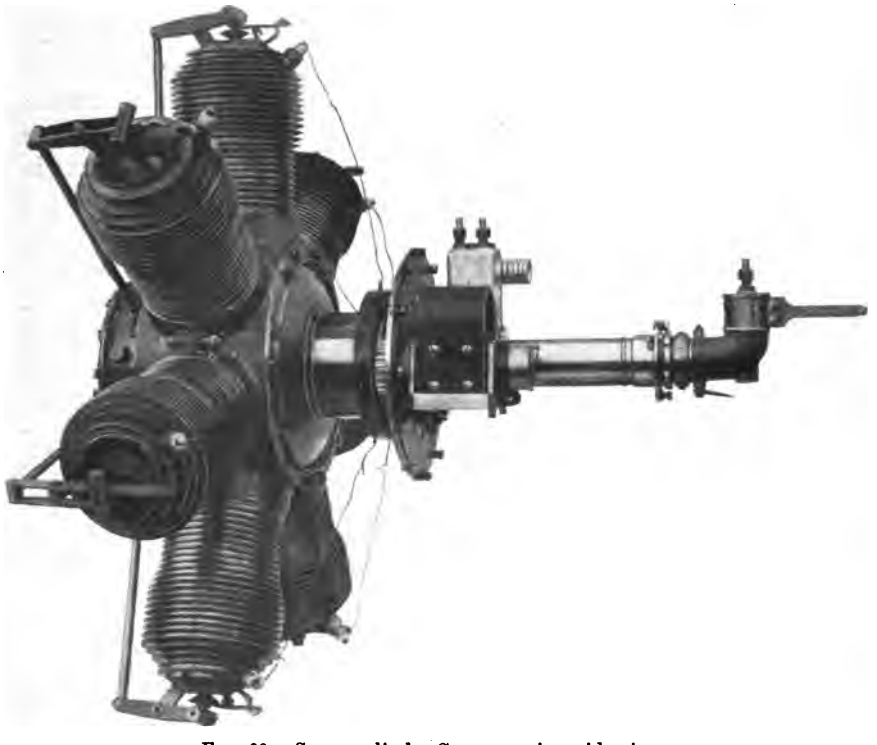

FIG. 60.—Seven-cylinder Gnome engine, side view.

The function of the master-rod is to render definite the position of the cage carrying the pins P during the running of the engine; other devices for attaining this end have already been described in connection with the Anzani and Salmson engines.

The arrangement adopted in the Gnome engines causes the master-rod to be in effect somewhat longer than the others, and causes also the position, velocity, and acceleration of the six subsidiary pistons to be somewhat affected; in practice, however, this does not appear to prejudice the smooth running of the engine. The six subsidiary rods Q have bronze-bushed solid-eyed "big ends,"

each bush being prevented from turning in its eye and eclipsing the oil-supply hole by a small key R.

The gudgeon ends are similarly bronze-bushed solid eyes borne on hollow steel gudgeon pins; these pins are fixed by a "snug" S, and are held in place by the singular device of a thin copper tube T, turned over at each end, as shown, on to recessed washers which bear upon the steel forks U carrying the pins. The ends of this copper tube are turned over by a special tool, and in order to remove a gudgeon pin one end of the tube must be cut off, a new tube being necessary each time a gudgeon is replaced; this mode of fixing is neat and has proved very effective. The steel casting U abuts against the lower surface of the piston crown, and into it is screwed the steel piece V, in the top of which the inlet valve seating is formed.

Pistons.—The pistons are of a very tough cast-iron, with very thin cylindrical part, and somewhat thick crown; the length of piston is about 0·85 of the cylinder bore. Each piston is fitted with two spring rings, the upper being a broad, thin, flexible band of bronze of L section backed by a cast-iron packing ring, while the lower is a normal cast-iron spring ring; the thin bronze ring adapts its form to that of the cylinder bore much as a cup-leather in a bicycle pump, and thus preserves gas-tightness even should the cylinder become slightly distorted by unequal heating in working. The gap of the bronze ring is usually placed on the leading side of the cylinder, that of the cast-iron packing ring behind being at the opposite end of the diameter; the gaps of all the rings must be not less than 1 mm. wide, when in place, to avoid risk of jamming in the cylinder through expansion when heated during working.

The Cylinders.—The cylinders are of nickel-chrome steel machined out of solid ingots, the cooling fins being left on in the process of machining; it will be noted that these fins increase in length towards the combustion chamber end, partly to confer increased strength on the explosion chamber, and partly to provide increased heat-radiating surface. As the leading surface of the cylinder meets more air than the following part, it tends to become more cooled, and this unequal cooling tends to cause distortion of the working barrel, which again results in more rapid wear; in some cases an attempt is made to reduce the cooling inequality by turning the cooling fins eccentrically upon the cylinder, so that the maximum radiating surface occurs on the following half.

The finished thickness of the working barrels is only $1\frac{1}{2}$ millimetres, *i.e.* less than one-sixteenth of an inch, and great care must accordingly be used when fitting up or dismantling the engine in order to avoid strains which might distort their form.

At the outer end of each cylinder a large circular hole screwed with an internal thread is left; this is filled by the casting A2 carrying the exhaust valve, which is secured in place by the light annular nut W. At the inner end the cylinder barrel is made somewhat thicker, and has also two collars, Z Z, left upon it; between these collars the barrel is gripped by the two parts of the steel crank-case A1, which are bolted together as shown at B1; the cylinder is prevented from turning in its seat by the light key C11.

The stress upon a transverse section of the working barrel is a maximum, in an axial direction, at the instant of explosion; the maximum explosion pressure in normal working may be taken, roundly, as 300 lbs. per square inch; as the bore of the 60 H.P. Gnome engine is 4·73″, this corresponds to a momentary load on the cylinder end of 5270 lbs. weight; to this must be added the load due to the centrifugal force arising from the rotation of the cylinder around the crankshaft axis. If we consider a section of the cylinder taken at the lower end of the combustion chamber, *i.e.* level with the upper surface of the piston crown when this is at the top of its stroke, then a rough estimate leads to the conclusion that the mass beyond this section—including the combustion chamber, exhaust valve and cage, plug, rocker, push-rod, etc.—is, roundly, 3 lbs., and may be regarded as rotating at a mean distance of 1·25 feet from the crankshaft axis. The normal speed of 1200 revolutions per minute corresponds to an angular velocity of 125·6 radians per second, and hence the centrifugal force created is $\frac{3 \times 125{\cdot}6^2 \times 1{\cdot}25}{32{\cdot}2}$, *i.e.*, roundly, 1845 lbs. weight; hence on this transverse section of the cylinder the load during working fluctuates between 1845 lbs. weight and $(1845 + 5270) = 7115$ lbs. weight.

Now the cross-section of the cylinder barrel is a tube of 4·73 inches diameter and 0·059 inches in thickness; hence there is an area of $\pi \times 4{\cdot}73 \times {\cdot}059 = 0{\cdot}877$ square inches; the corresponding tensile stresses created are $\frac{1845}{0{\cdot}877} = 2100$ lbs. per square inch, and

$\frac{7115}{0{\cdot}877} = 8100$ lbs. per square inch, approximately, and are thus quite low in value, notwithstanding the extreme thinness of the cylinder barrel.

The Crank-case.—The crank-case is of steel, in five parts, the central two A1, which hold the cylinders in place, being connected together by a spigoted bolted joint, as shown at B1. At the left-hand end is the cam-box, formed of a steel casting C1 which is closed by a fourth casting D1 formed in one piece with the coned extension E1, to which the propeller is attached. At the right-hand end is the "thrust-box," formed of a fifth steel casting F1 which is closed by the large screwed steel nut G1, formed in one piece with the gear-wheel H1 which drives the oil-pump and magneto. No aluminium is used in the construction of the Gnome engines.

The whole crank-case, with the cylinders and attached gear, are borne on the fixed crankshaft by the four ball bearings shown, that on the right taking the axial thrust of the propeller; the manner in which these bearings are housed is clear from an examination of the sectional view given.

Lubrication.—In the design shown in fig. 61 oil is forced by the gear-driven oil-pump J1 along pipes K1 and L1 to the crank-pin and distance-collar M1 respectively; from the ends of M1 it issues and lubricates the two ball bearings in the thrust-box F1. In the crank-pin the oil passes along the ducts shown, lubricating the several "big-end" pins and ball bearings of the cage FF; passing further towards the left, along the hollow crankshaft, the supply reaches the cam-sleeve D2. The gudgeons, cylinder walls, tappet guides, cam gears, etc., are served by the oil which exudes from the directly lubricated bearings and is whirled outwards by centrifugal action; sufficient unburnt oil from this source passes through the cylinders and, issuing with the exhaust, lubricates the exhaust valve stems and rocker fulcra.

The lubricant generally employed in the Gnome engines is castor oil; this is contained in a tank placed above the pump level, to which it flows by gravity; in very cold weather this oil becomes very viscous, and is then frequently diluted with about 8 per cent. of methylated spirit in order to increase its fluidity.

Carburation.—The carburettor shown in fig. 61 is of extremely simple unjacketed, floatless, single-spray design, attached to the

extreme right-hand end of the crankshaft at N1. The main air supply enters through the gauze-covered hole O1; the amount of mixture is regulated by the hand-controlled throttle P1; when the main air supply is nearly cut off, air passing up through the constantly open holes Q1 supplies an enriched mixture, small in quantity, which enables the engine to continue running slowly; the supply of petrol to the spraying nozzle is hand-controlled by the pilot. Simple though this carburettor is in its details, it has well fulfilled its purpose in normal flight service.

The carburetted air proceeds along the hollow crankshaft to the interior of the crank-case, and is thence distributed to the several cylinders during their suction strokes by way of the inlet valves fitted in the piston crowns. The crank-chamber is rendered gas-tight at the thrust-box end by a soft washer R1 pressed against the inner surface of the nut G1, as shown.

Ignition.—Ignition is by high-tension magneto S1; the engine being of the single-acting four-stroke type requires seven igniting sparks during each two complete revolutions, while the magneto furnishes but four sparks per two revolutions of its armature; hence the magneto armature is geared to run at $\frac{7}{4}$, *i.e.* one and three-quarter times the revolution speed of the cylinders.

A lead from the high-tension current collector on the magneto is connected to the highly insulated carbon brush T1, fixed in the casting KK, as shown; this carbon brush is maintained in contact with the face of an ebonite ring U1 fixed upon the outside of the thrust-box casting F1, and rotating with it; the ring U1 carries seven equidistant metal plugs, each of which is connected by a brass wire V1 to one sparking plug. In the rotation of the cylinders each of these metal plugs comes successively into contact with the fixed carbon brush T1, and the magneto sends a firing impulse at *alternate* contacts, the order of firing—as explained in the account of the Anzani engines (Chapter V.)—being 1, 3, 5, 7, 2, 4, 6, 1, . . .; the working impulses thus occur at equal angular intervals of $\frac{720}{7} = 102\frac{6}{7}$ degrees of cylinder rotation.

In the seven-cylindered Gnome engines the ignition is so timed that the firing spark passes when the cylinder is 26° *before* the position in which the piston is at the outer end of its stroke; the time of explosion is such that at normal speed the maximum pressure is developed just as the piston passes its outer dead centre;

it may be observed that 26° is practically equal to one-half the angular interval between consecutive cylinders. A spark advance of 26° at a revolution speed of 1200 per minute implies a time of explosion of ·0036 of a second.

Valves.—The inlet valve W1 is an extremely light automatic cone-seated steel valve having a large radius at the junction of stem and disc, the stem being drilled down for more than half its length in order to reduce its mass as much as possible; the valve is located in the centre of the piston crown, which is ordinarily one of the hottest parts of the engine, but is in this design kept cool by the periodic rushes of fresh cool gas through it. The centrifugal tendency of the valve to leave its seat is balanced by the two small counterpoises X1, X1, engaging with the lower part of the valve stem as shown; the spring is a light steel lamina bridging across between these counterpoises in the design illustrated.

The spring adjustment must be carefully made, as upon it depends the instant of opening and closing of the inlet valve, and consequently the satisfactory running of the engine; the spring is tested by inverting the piston and suspending a loaded scale-pan from a peg driven in the hole in the centre of the valve disc. In the 50 H.P. engines, for example, experience has shown that the best performance is attained when the valve just leaves its seat under these circumstances when the total load amounts to 4 lbs.; in the 80 H.P. design the appropriate load is 8 lb. 5 oz.

The object to be attained is to cause the valve to open with the least possible difference of pressure between the cylinder and crank-chamber, while the spring must be strong enough to close it promptly at the end of the suction stroke, in order to prevent any regurgitation of the mixture.

Automatic inlet valves have for some years disappeared from automobile practice, but instances of their use still appear in a few aero engines. Their delayed opening and early closing diminish the volumetric efficiency of the engine; they are also prone to "dance" on their seats during the running of the engine, with resulting earlier fatigue and breakage. Placed as in this design, in the centre of the piston crown, the valve is somewhat awkward to reach for examination or replacement, while a breakage may result in the whole charge of mixture in the crank-chamber being fired, with consequences that may easily be serious. Though an immense amount of important aviation work has been performed by Gnome

engines fitted in this way, it is yet noteworthy that the builders exhibited in 1913 a modification in which the inlet valve is ingeniously dispensed with altogether; some account of this modified design is given later in this chapter.

The Exhaust Valve.—The steel cone-seated exhaust valve Y1 is also of very light design, with a short stem drilled along part of its length to reduce its mass to the uttermost, and held to its seat by the light laminated spring shown; it will be remembered that laminated springs are used also in the Austro-Daimler aero engines, while such springs have for years been employed in the Lanchester car engines; direct impact of the exhaust gases upon the spring is prevented by a deflector Z1.

The exhaust-valve seating is formed in a casting A2 held in place in the cylinder head by the annular nut W; this casting carries also the bronze-bushed guide of the valve stem, the fulcrum bracket of the rocking lever, and the valve spring support. The centrifugal action during running tends to press the exhaust valve firmly in its seating; the centrifugal force of the tappet- and push-rods, on the other hand, tends to cause the valve to leave its seat; the spring is so adjusted as to leave a balance of force sufficient to cause the valve to close promptly at the desired instant. The valve is operated by the light roller-ended tappet, thin tubular push-rod, and rocker as shown; on opening, the burnt gases are discharged directly into the atmosphere. The unburnt oil passing out with the exhaust formed an objectionable feature of the engine in the earlier air-craft; the recent practice of housing the engine in a "stream-line" casing has removed this source of annoyance.

The tappet-rods are actuated by steel-plate cams C2, seven in all, keyed as indicated to a common bronze-bushed cam-sleeve D2, and locked in position by the annular nut E2; at the left-hand end of the sleeve D2 is also keyed a cut steel gear-wheel F2, meshing with two similar wheels G2 of half the diameter, these being united to wheels H2 which, in their turn, mesh with a wheel of equal diameter J2, keyed to the fixed crankshaft as shown; the view in the lower left-hand corner of fig. 61 shows clearly the arrangement of this epicyclic gear train. The wheels G2, H2 are carried on studs K2 projecting inwards from the cam-box casting D1, and thus rotate with the crank-case around the crankshaft axis; two G2, H2 pairs are provided, at opposite ends of a diameter, in order to preserve the balance of the gear. Suppose, firstly, the engine to

be of the ordinary type in which the crankshaft rotates in a fixed crank-case; then if J2 makes $+1$ revolution, H2 and consequently also G2 will make -1 revolution, and finally, therefore, F2 will make $+\frac{1}{2}$ a revolution; so that in this case the cam-sleeve would rotate in the same direction as the crankshaft, but at half the speed —which is the correct ratio for the cam operation.

The actual case is obtained by imposing a revolution -1 upon the whole system, in which case we have:

Wheel J2 makes $+1-1=0$ revolutions, *i.e.* remains at rest.
Studs K2 make -1 revolution; this being the engine speed.
Wheels H2 and G2 make $-1-1=-2$ revolutions.
Wheel F2 makes $+\frac{1}{2}-1=-\frac{1}{2}$ revolution.

Thus in the actual case the wheel F2—with the attached cams—revolves in the same direction as the crank-case and cylinders, but at one-half the revolution speed, as is necessary.

Each cam of course actuates one tappet-rod, so that the axes of these rods are successively further from the axial plane of the cylinders, and the obliquity of the push-rods thus increases from the first to the seventh cylinder.

The exhaust valve is timed to open when the crank-pin is 65° from its bottom dead centre, and closes 13° after it has passed its top dead centre; thus the opening is unusually early, and the closing somewhat late; this tends to cause better scavenging and to preserve a cooler cylinder, but involves the sacrifice of some of the energy of the working gases, with consequent lessened economy in fuel consumption.

An opening 65° before the bottom dead centre corresponds in this case to 0·77 of the working stroke; the usual exhaust timing in car engines is to open about 45° early, and close about 6° late; 45° early would here correspond to 0·89 of the stroke.

Accuracy of Balance.—With so comparatively large a rotating mass, it is of much importance that the balance be kept as accurate as possible; for example, although the cylinders are made as nearly as can be identical in size, form, and quality of material, it is yet found that individual cylinders differ in weight. Should a cylinder need replacement, a difference not exceeding half an ounce only in weight is allowed between the old and new cylinders, and these are carefully weighed against one another to ascertain that the difference comes within this limit.

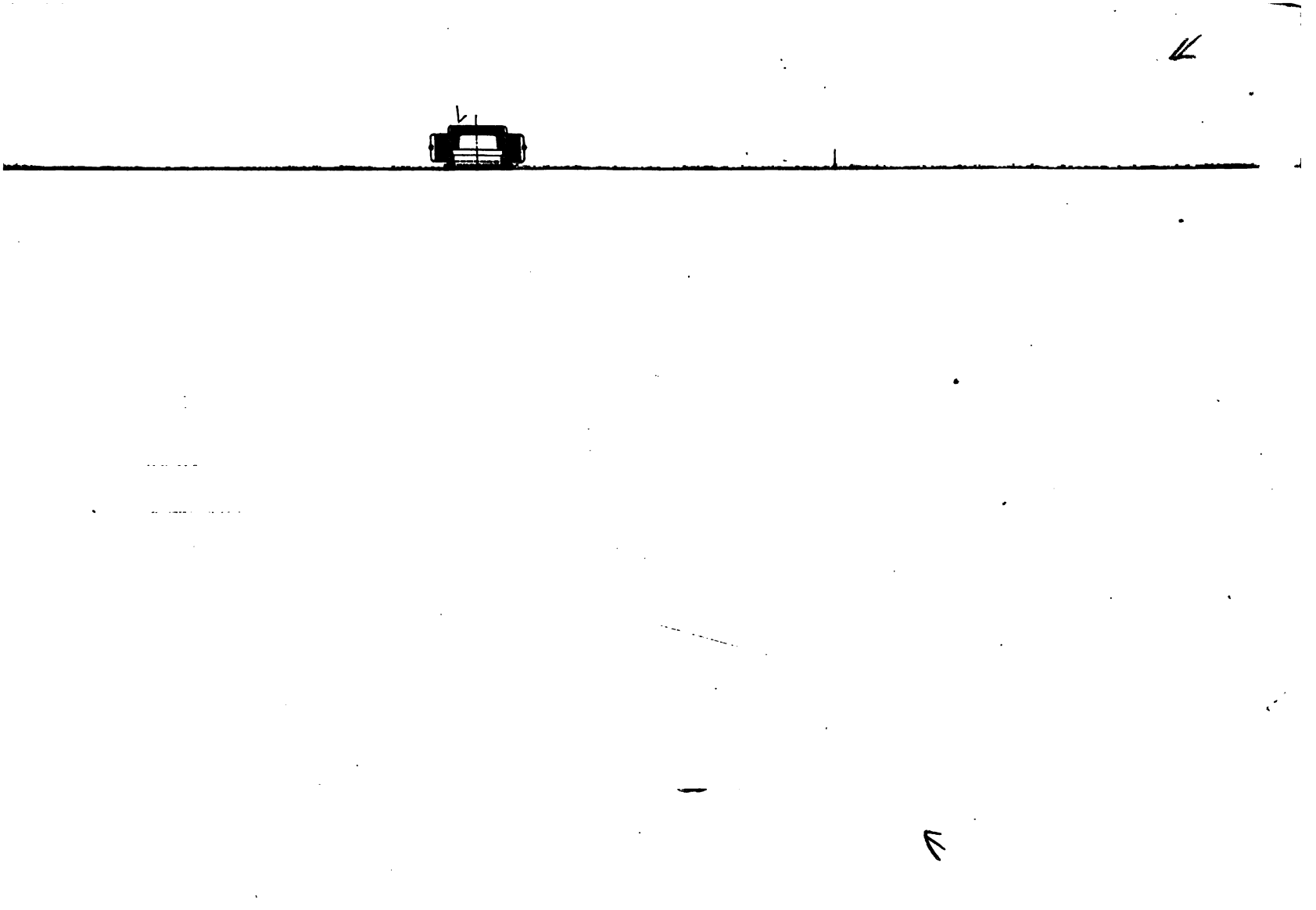

The Gnome engines are started by pulling the propeller round by hand; the revolution is in a counter-clockwise direction as viewed from the front, *i.e.* facing the cam-box.

Running and Maintenance.—When properly assembled and carefully driven, a Gnome engine should run for a total period of sixteen hours at full load without requiring any other attention than possibly renewal of faulty or carbonised sparking plugs. After this period the engine must be very carefully dismantled,

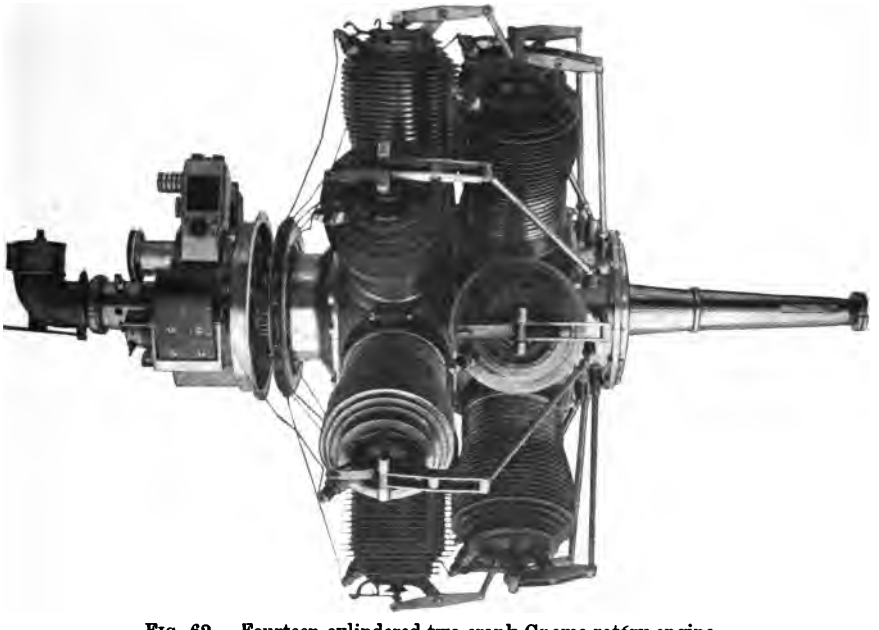

FIG. 62.—Fourteen-cylindered two-crank Gnome rotary engine.

and every part closely examined; defective parts are renewed and not repaired. The reassembling of the engine demands equal care and skill. Trouble is rarely experienced with the ball bearings, but some of the following parts usually need renewal due to wear or fatigue after from 50 to 100 hours of service :—

Exhaust valves, seatings, and rocker fulcrum pins.
Tappet-rod pins.
Inlet valves, seatings, and guides; counterpoises and their pins.
Exhaust and inlet valve springs.
Bronze piston rings and cast-iron packing rings.
Carbon brush, sparking plugs, and wires.

General.—In the Table below the leading particulars are given of the 1913 range of Gnome engines, exclusive of the then just introduced "Monosoupape" type, which is referred to later. It will be seen that, in addition to the seven-cylindered designs, there are also engines of nine, fourteen, and eighteen cylinders. The fourteen-cylindered engines comprise two groups, each of seven cylinders, associated together as shown in fig. 62, each group acting on its own crank-pin; the cylinders are alternated, so that the angular interval between consecutive cylinders is $\frac{360}{14} = 25\frac{5}{7}$ degrees, while working impulses occur at intervals of twice this, viz. $51\frac{3}{7}$ degrees of angular rotation of the engine.

LEADING PARTICULARS OF THE "GNOME" AERO ENGINES OF 1913, EXCLUDING "MONOSOUPAPES."

Rated horse-power.	No. of cylin-ders.	Bore in inches.	Stroke in inches.	Nom-inal full speed. Revs. per min.	Total weight in lbs.[1]	List price in £ ster-ling.	Approx. effective B.H.P. devel-oped.	Approx. revolu-tion speed in long runs. Revs. per min.	Piston speed in feet per min.	Value of ηp in lbs. per square inch.	Weight in lbs. per effective B.H.P.	List price in £ per effective B.H.P.
50	7	4·35	4·73	1200	172	520	45	1100	870	65·8	3·8	11·6
60	7	4·73	4·73	1200	192	520	55	1100	870	68·0	3·5	9·45
80	7	4·88	5·52	1200	207	700	72	1100	1010	71·8	2·9	9·7
100	9	4·88	5·90	1200	297	880	90	1100	1080	65·4	3·3	9·8
100	14[2]	4·35	4·73	1200	308	960	90	1100	870	65·7	3·4	10·7
120	14[2]	4·73	4·73	1200	297	1040	110	1100	870	68·0	2·7	9·45
160	14[2]	4·88	5·52	1200	396	1400	145	1100	1010	72·6	2·7	9·7
200	18[2]	4·88	5·90	1200	540	1760	180	1100	1080	65·4	3·0	9·8

Similarly, the remarkable eighteen-cylindered 200 H.P. engine, of which an external view is given in fig. 63, is made up of two nine-cylindered units associated together. In both the fourteen- and eighteen-cylindered designs two high-tension magnetos are fitted, each supplying one group of cylinders.

These double engines are never overhung, but are always carried on two supports, that in front being fitted with a ball bearing in which the end of the propeller shaft is borne.

In the eighteen-cylindered engine working impulses occur at each 40° of angular rotation of the cylinders; at the normal full speed of 1200 revolutions per minute the frequency of the impulses is thus 180 *per second.*

[1] Weight includes that of magneto, carburettor, and oil-pump.

[2] Two-crank engines.

This eighteen-cylindered engine has been scarcely used as yet, but instances of aeroplanes fitted with the fourteen-cylindered type are not very uncommon.

In actual service it is in general best to run the Gnome engines at from 600 to 1100 revolutions per minute as a maximum, and the effective output at 1100 revolutions per minute is found to be

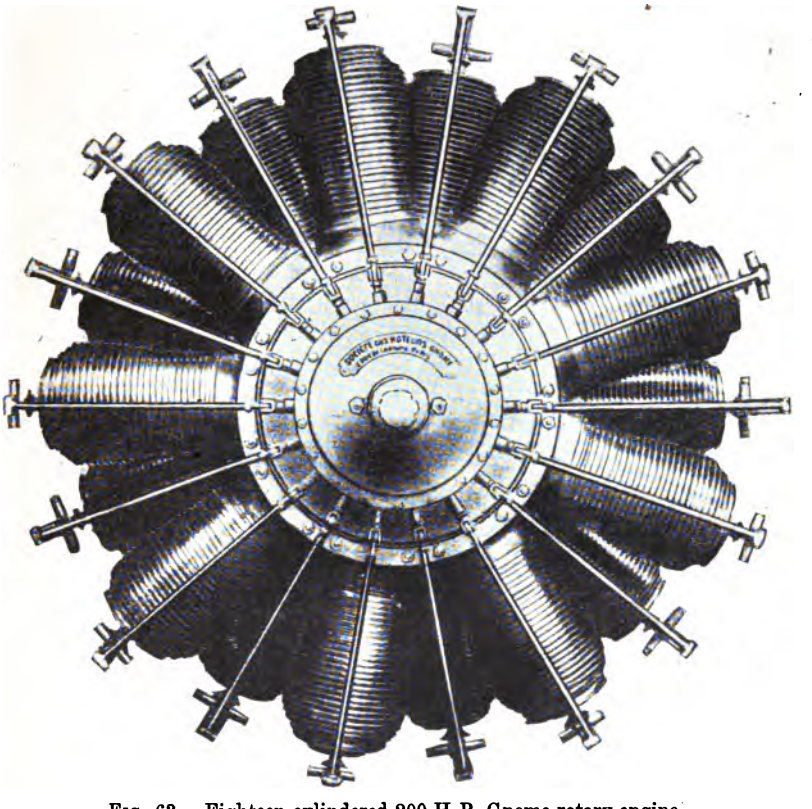

FIG. 63.—Eighteen-cylindered 200 H.P. Gnome rotary engine.

at best, roundly, 90 per cent. of the rated power;[1] in the above Table the estimates of piston speed, etc., are based upon these effective maxima of speed and power.

The piston speed is quite moderate in comparison with normal

[1] The first seven-cylindered 80 H.P. Gnome engine constructed by the Daimler Motor Co. at Coventry was tested in October 1914 at 1100 r.p.m., and averaged about 64 B.H.P. during a continuous run of 14½ hours, *i.e.* just 80 per cent. of its rating.

car-engine practice, while the value of ηp is also low—as is only to be expected from engines with automatic inlet valves and specially early exhaust opening; notwithstanding this, however, the type produces a very light engine, the weight per *effective* brake horse-power being less than 3 lbs. in the popular 80, 120, and 160 H.P. models.

No recent test results have been published, but a test by R. A. Brewer in 1910 of one of the seven-cylindered 50 H.P. Gnome engines showed a petrol consumption of about 0·63 lb. per B.H.P. hour, while the consumption of lubricating oil amounted to nearly 1½ gallons per hour. Improvements since introduced in the lubricating system have somewhat reduced this large consumption of oil.

The "Monosoupape" Gnome.—It has already been mentioned that there was first exhibited at Paris in 1913 the ingenious single-valve or "Monosoupape" type Gnome engine, in which the inlet valve is altogether omitted; a sectional view of part of this engine is given in fig. 64, showing one cylinder, part of the crankshaft, the cam-box, and the propeller "nose."

The piston is of cast-iron, with a thick concave crown connected solidly by webs to the gudgeon-pin bosses to prevent distortion under the explosion pressure; it will be remembered that concave pistons are used also in the Green engine described in the preceding chapter. The Gnome Company at first used pressed-steel pistons in the Monosoupape engines, but later reverted to cast-iron of the design shown.

The hollow steel gudgeon pin is here fixed in the piston bosses by the usual device of a single steel set-screw with a conical prolongation.

The section shown in fig. 64 is of a nine-cylindered 100 H.P. engine having a bore of 4·33 inches and stroke of 5·90 inches; the master connecting-rod is shown as before, together with a portion of one of the remaining eight rods; comparison with fig. 61 shows a general similarity in the two "big-end" cages, though there are some small variations of detail arising from an improved system of lubrication in the Monosoupape type. The cylinders, as before, are of nickel-chrome steel, but now project further into the crank-chamber and contain a belt of ports A A overrun by the piston when near the bottom of its stroke; this lengthening of the cylinders renders it necessary that they be cut away to allow

clearance for the connecting-rod swing as indicated. In the cylinder head is the massive steel cone-seated exhaust valve B, which is kept to its seat by the spring C, and actuated by the rocker and push-rod shown; the centrifugal force arising from the tappet and push-rod as before balances that of the valve, the spring adjustment being such as to provide the necessary small excess force to keep the valve seated when the rocker is not acting upon it.

The valve is borne in a steel cage DD fixed in the cylinder head by the light annular nut E, as before.

The exhaust valve is here of somewhat substantial proportions, in order to prolong its working life and resist the effects of overheating, which are greater in this than in the normal type of engine, owing to the mode of speed regulation adopted. The air drawn into the crank-chamber now enters from the *front* of the engine through the open end F of the hollow nose-piece GG, and passing inwards traverses the perforated end H of the petrol supply pipe, thus becoming richly carburetted; under normal running conditions the mixture thus formed is so rich as to be non-explosive.

Suppose the piston to be performing its downward working stroke; the exhaust valve is opened early, allowing the burnt gases to escape into the atmosphere, so that when the piston overruns the ports A A the pressure within the crank-chamber and that within the cylinder are approximately equal, little or no flow of gas accordingly taking place in either direction through the ports. On the succeeding up-stroke the exhaust valve remains open as usual and the residual exhaust gas is discharged. The piston next commences its downward suction stroke, but instead of the exhaust valve now closing it is held open until about one-third of the suction stroke is performed, thus permitting *fresh air* to enter the cylinder; the exhaust valve being closed and the downward motion of the piston continuing, a partial vacuum is created within the cylinder; accordingly, when, near the end of the suction stroke, the piston overruns the ports A A, some rich mixture from the crank-chamber immediately enters the cylinder, and mingling with the fresh air within forms the explosive charge for the next impulse. The subsequent ascent of the piston compresses this charge into the combustion chamber, when it is fired, and the working stroke follows as usual; the cycle is then repeated indefinitely.

The engine thus works upon the four-stroke cycle, but employs only a single valve; the rapidly alternating currents of exhaust

gas and fresh air through the exhaust valve create a characteristic noise in these Monosoupape engines, and obviously, also, it is impossible to employ any form of exhaust-silencing apparatus.

Speed regulation is effected by varying the extent and duration of opening of the exhaust valve by a system of linkage JK, hand-operated by the pilot through suitable connections; this linkage gives an angular motion of adjustment to the sleeve L, which carries a system of subsidiary rollers M fitted on hinged arms N; from these arms the several valve tappet rollers O are actuated as indicated in fig. 64. This mode of regulation was found to cause rapid burning of the exhaust valves if these were made very light; by adopting a more massive design the difficulty has largely been overcome.

The petrol issuing from the perforated pipe H into the crank-chamber is supplied by a small force-pump, the quantity delivered being thus proportional to the engine speed; the mixture in the crank-chamber is normally so rich as to be non-explosive, and hence there is no risk of it being fired by the residual exhaust when the ports A are in communication with the space above the piston. The supply of air being taken in at the front of the engine tends also to safety in working, while the petrol being wholly vaporised within the crank-chamber tends to keep the engine cool, and, conversely, there is no carburettor to freeze up at high altitudes; the petrol supply pipe is carried along the hollow crank-shaft, and through the crank-pin and crank-cheeks, and terminates at H as described.

These Monosoupape engines are capable of running down to the low speed of about 200 revolutions per minute, while their output is claimed to be slightly in excess of their rated power.

The lubricating details show an improvement upon those in the ordinary two-valve engine; it will be noted that the gudgeon bearings are now positively supplied with oil passing outwards from the "big-end" cage along the hollow webs of the connecting-rods, while the oil exuding from the gudgeon bearing is led by the two ducts shown to the cylinder walls. The cam-sleeve, cams, and cam-shaft gears are also positively lubricated by oil supplied from the left-hand portion of the crankshaft through the several ducts indicated in the section; positive lubrication is also provided for the fulcrum joint of the rocking lever.

In 1914 the Gnome Monosoupape engines were built in two

[*To face page* 166.

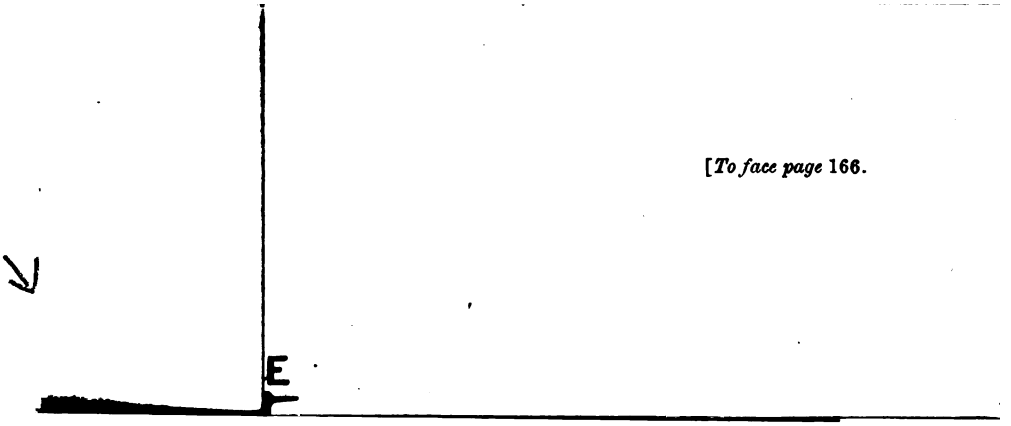

sizes, rated as of 80 and 100 H.P. respectively; the leading particulars of these are given hereunder:—

H.P. rating.	No. of cylinders.	Bore, inches.	Stroke, inches.	Speed, r.p.m.	List price, £ per H.P.
80	7	4·33	5·9	1200	7·5
100	9	4·33	5·9	1200	8·8

The weight per H.P. is slightly less than that of the two-valve type.

The skill evidenced in their design, the care and attention bestowed on every detail, and the excellence of construction of the Gnome engines, with resulting reliability in service, combine to maintain this type in the high position it has deservedly won in the world of aviation.

The "Gyro" Rotary Engine.—This American seven-cylindered air-cooled rotary engine is shown in external view in fig. 65.

The cylinders are of 3 per cent. nickel steel, with the exhaust valves in their heads operated by push-rods and rockers; the pistons are of steel, with two rings, as in the normal Gnome engine already described. The crankshaft is of nickel-chrome steel, carried in ball bearings within a thin crank-case of vanadium steel; the crankshaft is, of course, fixed, and the crank-case and cylinders rotate around it.

The inlet valves were at first located in the piston crowns, as in the Gnome engine, but were actuated in a special manner;[1] in the 1914 design, however, these inlets were abandoned and replaced by the device diagrammatically shown in fig. 66.

This consists of a cam-operated piston valve C working within a cylindrical casing B, which communicates with the cylinder by means of ports A, overrun by the working piston. The top of the casing B communicates with the exhaust pipe, or directly with the atmosphere, while the bottom is connected to a supply of super-rich carburetted air contained in a casing on the opposite side of the crank-case.

During the working stroke of the power piston P, the piston valve C is moving downwards, so that when P overruns the ports A, the valve C is in the position shown in fig. 66; the bulk of the exhaust gas immediately escapes through the ports A, *via* the top of B, into the atmosphere. It will be noted that a silencing apparatus can readily be applied to this portion of the exhaust.

[1] For an illustrated account of these, see *Proc. I.A.E.*, vol. vii. pp. 90–91.

The subsequent up-stroke of the power piston P scavenges the remaining burnt gases through the now lifted exhaust valve D. During part of the following suction down-stroke of P the valve D remains open—as in the Monosoupape Gnome engine already described,—thus admitting fresh air to the cylinder; D is then closed, and the continued descent of the piston P creates a partial

FIG. 65.—External view of the 80 H.P. "Gyro" engine.

vacuum above it, so that when the ports A are overrun a rich mixture enters by way of the lower part of the casing B, as the piston valve C has by then moved to the top of its stroke, thus connecting the ports A with the supply of richly carburetted air. This rich mixture mingles with the air already in the cylinder in the correct proportion to form the explosive charge of the next working stroke.

The ascent of the piston next compresses this charge, which is

then fired as usual; the engine thus operates on the four-stroke cycle, with only one valve, viz. D, exposed to the pressure of the explosion.

By the adoption of the valve C an auxiliary exhaust is obtained without any risk of affecting the carburation, and as the ports A serve both for exhaust and admission, overheating of the cylinder

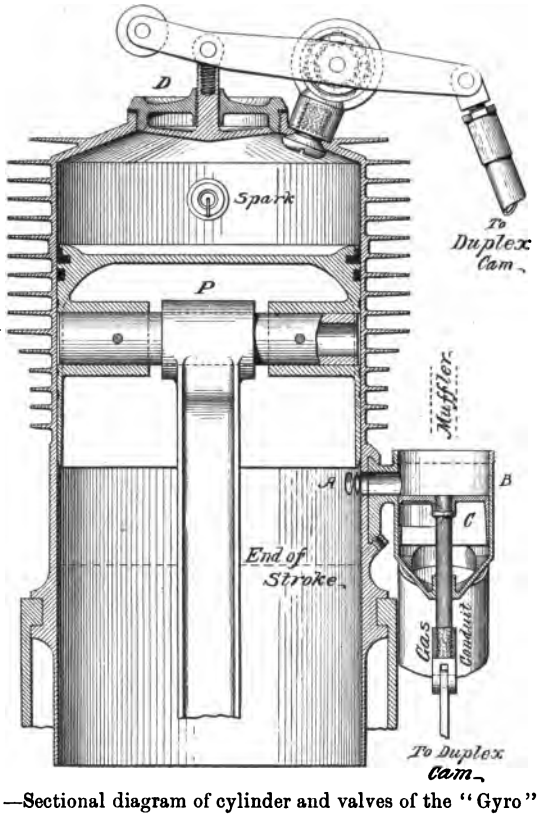

FIG. 66.—Sectional diagram of cylinder and valves of the "Gyro" engine.

walls in their vicinity is avoided. The exhaust valve D—usually the hottest part of the engine—is here not only relieved of the duty of passing out the bulk of the exhaust gases, but is also kept cool during running by the periodic inflow of fresh air to the cylinder as described. As already pointed out, the major portion of the exhaust issuing from the top of B can be easily silenced, but it is obviously impossible to apply any silencing device to the exhaust valves D.

The 80 H.P. Gyro engine runs normally at about 1275 revolutions per minute, and with all immediate accessories is said to weigh only 200 lbs., which is 2·5 lbs. per rated horse-power.

The "Le Rhone" Engines.—These are air-cooled rotary engines having seven and nine cylinders in single-crank, and fourteen and eighteen cylinders in double-crank designs. An external view of

FIG. 67.—Eighteen-cylinder 160 H.P. "Le Rhone" rotary engine.

the eighteen-cylindered 160 H.P. type is given in fig. 67; the two crank-throws are mutually at 180°.

These engines are constructed almost wholly of steel, but a noteworthy feature of the design is that thin cast-iron liners are shrunk into the steel cylinders to improve the surface of the working barrels and reduce piston friction.

Both exhaust and inlet valves are located in the cylinder head and are mechanically operated by one push-rod and rocker; the carburetted mixture is formed in the crank-chamber, and is distributed to the several inlet valves by a system of radiating pipes,

as shown in the illustration. The exhaust valves are placed on the front, or leading face, of the engine, so as to derive as much benefit as possible from the cooling action of the air; the inlet valves and piping are at the rear.

The seven-, nine-, fourteen-, and eighteen-cylindered engines are rated at 50, 80, 120, and 160 H.P. respectively[1]; in all cases the cylinders have a bore of 4·13 inches, and the stroke is 5·52 inches, with a normal speed of 1200 revolutions per minute. The weight in lbs. per rated horse-power ranges from 3·67 in the seven-cylindered, to only 2·9 in the eighteen-cylindered design.

The D'Henain Rotary Engine.—In the seven-cylindered 50 H.P. air-cooled rotary D'Henain engine the rather daring course has been adopted of making the cylinders and crank-case of cast-iron in one piece; both valves are mechanically operated, and the mixture is led from the crank-chamber to the inlet valves by a system of radial pipes.

The Clerget Rotary Engine.—Yet another seven-cylindered air-cooled rotary aero engine is the 80 H.P. Clerget, with the usual steel cylinders and crank-case. Both inlet and exhaust valves are in the cylinder heads, and are mechanically operated by push-rods and rockers, the charge being delivered to the inlets through a system of radial pipes, as in the case of the Le Rhone and D'Henain engines already mentioned.

The early success of the "Gnome" as a flying engine has caused inventors to devote a large amount of attention to engines of the rotary type, and a great many designs, some of remarkable ingenuity, have been produced, though none has, so far, achieved any lasting practical success. For example, in the (two-throw crank) six-cylindered 60 H.P. "E.J.C." air-cooled rotary engine, both cylinders *and crankshaft* rotate, of course in opposite directions; there are two propellers, one of which is attached to the crank-case as in the normal type of rotary engine, while the other is affixed to the end of the crankshaft. The absolute revolution rate of each depends only upon the resistances opposed to the two rotating systems; it is stated to be usually found that the crankshaft makes, roundly, 1200 revolutions per minute, and the crank-case and cylinders 800 revolutions per minute, so that the relative revolution rate is about 2000 per minute.

The Burlat Rotary Engine.—One of the most remarkable

[1] There is also a 100 H.P. engine having *eleven* cylinders acting on one crank-pin; *v.* Appendix.

rotary engines so far proposed for use in aviation is that of Messrs Burlat Brothers (1904),[1] in which not only do both cylinders and crankshaft turn in the *same* direction, but the crankshaft rotates twice as fast as the cylinders. One of these engines was exhibited at Paris in 1905; the design exhibits further peculiarities which will now be explained.

The geometrical fact upon which the action of the engine is based is that every point upon the circumference of a circle rolling within a second fixed circle twice as large, describes a straight line which is a diameter of the larger fixed circle.

This is easily shown; for, in fig. 68, let the smaller circle have rolled from OP to OC, so that its centre has described the angle POC about O; join BQ.

Then the angle QBC is evidently twice the angle POC; that is,

$$\frac{\text{Arc QC}}{\text{Radius BC}} = 2 \times \frac{\text{Arc PC}}{\text{Radius OC}} = \frac{\text{Arc PC}}{\text{Radius BC}}, \text{ as OC is twice BC.}$$

Hence we have Arc QC = Arc PC. That is, in rolling through the angle POC, the point Q on the circumference of the rolling circle, starting from P, describes the straight line PQ; thus, as the rolling proceeds, Q describes the complete diameter PP′. As this result is true for any point on the circumference of the rolling circle, the proposition is proved.

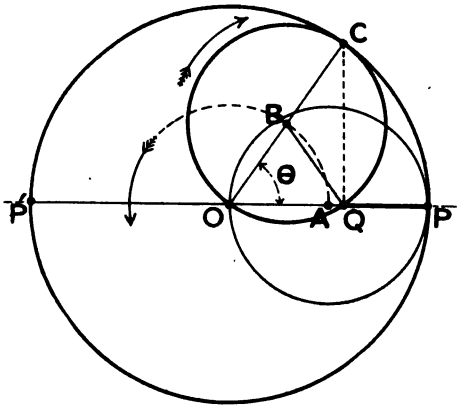

FIG. 68 —The "straight-line" hypocycloid.

Observe next that as the circumference of the fixed is twice that of the rolling circle, the latter makes plus two revolutions on its axis in the direction of the arrow during one complete tour; but as its axis makes minus one revolution in the same time, the rolling circle makes only $+2-1$, that is, plus *one* revolution per tour relatively to the plane of the fixed circle.

[1] The arrangement adopted is claimed to have been first invented by Sir C. Parsons about 1877 and proposed for use as a steam engine (the "epicycloidal" engine), and again re-invented as a four-cylinder internal-combustion engine by Mr Abraham about 1898.

Also during one complete tour of the rolling circle the point Q moves from P to P′, and back again to P.

Denote PQ by x; OC by $2r$; POC by θ; and the (uniform) angular velocity of OC by ω; then $\frac{d\theta}{dt}=\omega$, and is constant.

Thus $x=\text{OP}-\text{OQ}=2r-2r\cos\theta=2r(1-\cos\theta)$ gives the position of Q in terms of θ.

The velocity of Q is $\frac{dx}{dt}=2r\sin\theta\times\frac{d\theta}{dt}=2\omega r\sin\theta$, and is thus proportional to CQ, while its acceleration is $\frac{d^2x}{dt^2}=2\omega^2 r\cos\theta=\omega^2\times\text{QO}$, so that the acceleration of Q is always directed to O, and is proportional to QO. Thus the point Q has a simple harmonic motion about O, similar to that of a piston with a connecting-rod of infinite length, and stroke PP′.

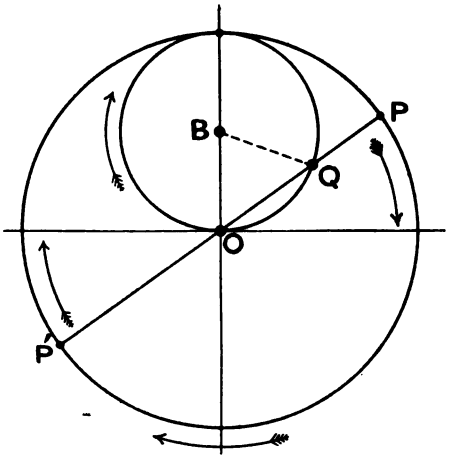

FIG. 69.

Next suppose that to the whole system of fig. 68 is communicated a rotation of $+1$ about the axis O; this condition is illustrated in fig. 69.

In this case the axis B of the smaller circle becomes fixed, and this circle now rotates about this fixed axis at a speed $+2-1+1=+2$, while the formerly fixed larger circle now rotates about its axis O at a speed $+1$; thus the smaller circle rotates at twice the speed of the larger, and in the same direction—a result that is obviously true, as the case now becomes one of a 2 : 1 internal gearing.

Through any point Q on the circumference of the smaller circle draw the diameter PP′; then while the small circle makes two revolutions about its axis B in the direction of the arrow, the large circle and the diameter P′P together make one revolution in the same direction about the axis O, and the point Q moves from P to P′ and back to P in a plane fixed to and moving with the large circle.

In the Burlat engine, fig. 70, B becomes the axis of the crankshaft; BQ the crank; Q the crank-pin; while P′P materialises into a rigid rod, eye-jointed to the crank-pin Q as indicated, and produced as shown; each end carries a piston S, sliding in a cylinder, these cylinders forming one with the large circle, and rotating with it about the axis O.

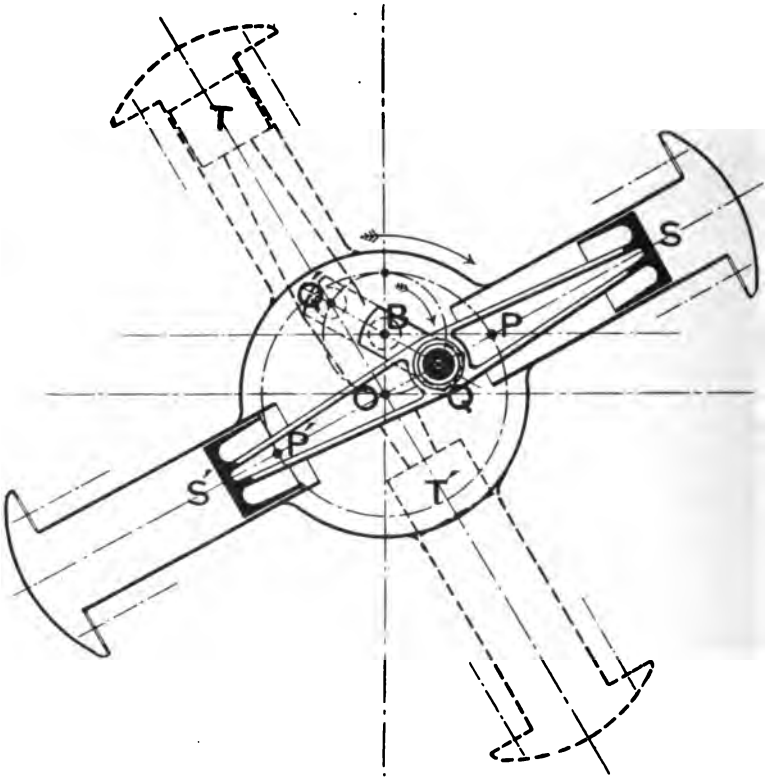

FIG. 70.—Diagram illustrating the Burlat rotary engine.

Thus the Burlat engine possesses the singularities of (1) a single connecting-rod *rigidly fixed* to two opposed pistons S′, S; (2) the cylinders and casing turn about the axis O in the same direction as the crankshaft turns about its axis B, but at only one-half the speed; and (3) each piston has a stroke equal to *four* times the crank radius BQ, and performs this stroke while the crankshaft makes one *complete* revolution.

Actually a two-throw crankshaft was employed, with the

throws at 180°, and a second pair of cylinders was mounted on the casing with their common axis at right angles to that of the first pair, as indicated by TQ'T' in fig. 70. The engine was arranged to work on the four-stroke cycle, so that the crankshaft made four, and the cylinders two, revolutions per cycle.

The trunnion bearings in which the cylinder casing revolved were firmly supported in a rigid fixed frame which carried also the two bearings of the crankshaft; the axis of the crankshaft was placed exactly parallel to, and distant exactly one crank radius from, that of the trunnion bearings; the air propeller was attached to one end of the crankshaft. This Burlat aero engine has not, so far, succeeded in practice.

The Demont Engine.—Very light though the single-acting rotary aero engine already is in proportion to its power output, inventors are constantly endeavouring to reduce still further the proportion of weight to power, and one direction in which this object may possibly be attained is by employing *double*-acting cylinders, *i.e.* cylinders in which explosions are caused to occur on each side of the piston in succession. The great practical difficulty with double-acting cylinders is to keep the pistons from overheating; though such cylinders are regularly and successfully used with oil- or water-cooled pistons in very large stationary engines running at from 100 to 200 revolutions per minute, the high revolution speeds of automobile and aero engines render oil or water circulation through their pistons entirely impracticable. It is, however, conceivable that an effective arrangement of *air*-cooling the pistons might be devised, and Messrs Demont of Puteaux have been enterprising enough to attempt this in an interesting engine which was exhibited at the Paris Aero Exhibition of 1913.

The 300 H.P. Demont six-cylindered double-acting air-cooled rotary aero engine is diagrammatically shown in section in fig. 71; the working barrels of the cylinders with the usual cooling fins will be recognised, but the pistons here take a quite unusual form, each being in two parts, and each part comprising a trunk A and flanged disc B, this latter forming the power piston; the two parts are united together by the central bolt C, as indicated.

Both working pistons and trunks are fitted with spring rings to ensure gas-tightness, while the avoidance of overheating is attempted by causing a current of air to pass radially outwards from the crank-case through the inner trunk, round the piston,

and finally into the atmosphere by way of the outer trunk—as shown by the arrows; this air-current is assisted by the centrifugal action of the rotating engine. Each piston contains a baffle plate D with a large rim of circular section, and it will be noted that the inner surfaces of the piston are provided with fins to assist the cooling action of the impinging current of air.

In the design illustrated, the external diameter of the trunk is 0·4 of that of the cylinder bore; as the swing of the connecting-rod must be contained within the trunk, the stroke of the engine is necessarily relatively short, and in this case is but 0·4 of the bore. The connecting-rods are hollow, of circular section, and relatively long, the length between centres being 2·65 times the stroke; the mode of attachment of the gudgeon pin to the piston is clearly shown in the figure; the non-adjustable big ends are forked, and threaded upon a long sleeve-bush E, as indicated; the axes of the six cylinders accordingly lie all in one plane normal to the crankshaft axis.

The crankshaft is fixed, and the crank-case and cylinders rotate bodily around it upon the ball bearings shown; an external ball bearing F, supported in the aeroplane frame, relieves the crankshaft of any bending action due to overhanging weight.

The valves are placed with their axes parallel to that of the crankshaft, and are actuated through the system of linkage indicated by twelve face cams H carried on a sleeve mounted on the crankshaft and driven at half the engine speed by an epicyclic train K, whose action is similar to that of the Gnome engine already described (*q.v.*).

As the engine is double-acting, there is an inlet and an exhaust valve at each end of each cylinder; the exhausts are placed in front, so as to benefit from the cooling action of the air-stream meeting the engine, while the inlets are on the rear face and are supplied with carburetted air from the hollow crankshaft through the ports L and mixing chamber M.

Double ignition is shown, with a sparking plug fitted in each valve pocket; the plugs in the exhaust pockets are unlikely to give very effective ignition. With a single high-tension magneto of the normal two-spark type, its armature must be driven at three times the engine speed.

It will be observed that this rotary engine has an *even* number of cylinders, viz. six, operating upon one crank-pin; notwithstanding

this, the impulses occur at equal angular intervals of revolution, due to the cylinders being double-acting. Each pair of opposed cylinders may be regarded as a complete unit, and the sequence of operations is shown in the Table hereunder, the letters F, E, S, C denoting "firing," "exhaust," "suction," and "compression," respectively :—

Revolution angle.	Cylinder end.			
	N1.	N2.	N3.	N4.
0°–180°	F	C	S	E
180°–360°	E	F	C	S
360°–540°	S	E	F	C
540°–720°	C	S	E	F
0°–180° etc.	F	C	S	E

Thus each *pair* of cylinders furnishes one impulse per *stroke*, or two impulses per revolution; as there are here three pairs of cylinders, there are consequently six impulses per revolution at equal angular intervals of 60°, from the six cylinders. If the engine make 2000 revolutions per minute, this corresponds to 12,000 impulses per minute or 200 explosions per *second*.

The cylinders have a bore of 6·9 inches and stroke of only 3·15 inches, and the engine is stated to have a normal speed of 2000 revolutions per minute; for an output of 300 B.H.P. this would correspond to a value of ηp of 100 lbs. per square inch. The over-all diameter of the engine is about 2 feet 6 inches.

This interesting engine is stated to weigh only 220 lbs., corresponding to the very remarkable figure of but 0·73 lb. per rated B.H.P; so far, however, no accounts appear to have been published of any actual performances.

Two-stroke Cycle Rotary Aero Engines.—All the engines previously described herein operate upon the "Otto" or "four-stroke" cycle, in which each single-acting cylinder only furnishes one working impulse in every two revolutions. Another direction in which inventors have attempted to still further reduce the relation of weight to power in aero engines is by the adoption of the "two-stroke" cycle of operations, by which the frequency of the

working impulses per cylinder is doubled; the extreme minimum of weight-power relation would be reached ideally in a high-efficiency two-stroke double-acting rotary engine, but its practical realisation is not yet in sight; several single-acting two-stroke rotary and radial aero engines have, however, already been proposed.

The first commercially successful two-stroke internal-combustion engine was that invented and developed by Dugald Clerk between 1878 and 1881; a diagrammatic section is given in fig. 72. The power piston A, when near the bottom of its stroke, overruns a belt of ports B, through which the burnt gases at once escape into the atmosphere, as indicated by the arrows.

CC is a charging pump driven by the engine, by which carburetted air is drawn through the carburettor D, and automatic suction valve E, and delivered through the pipe FF and automatic inlet valve H to the top of the combustion chamber.

As arranged, it will be seen that when the power piston A is near the bottom of its stroke, the pump plunger is moving rapidly towards the left, compressing its charge of carburetted air; so soon, therefore, as the pressure within the power cylinder is relieved by the exit of the burnt gases through the ports B, the superior pressure above H causes this valve to open, and fresh mixture—at a pressure of 3–5 lbs. per square inch, immediately flows into the cylinder, displacing the burnt gas and assisting its escape. To render this action most effectual, and at the same time to guard against loss of fresh mixture through the ports B, the combustion head is made of the expanding conical form shown in the diagram. Exhausting and charging thus occur simultaneously in the Clerk two-stroke cycle engine.

The piston on its up-stroke first covers the ports B and then compresses the entrapped fresh mixture, the valve H automatically closing as soon as compression begins; at or near the top of the stroke the compressed charge is fired by the ignition plug K, and the working stroke follows; hence every down-stroke is a working stroke, and this engine accordingly gives one working impulse per single-acting cylinder per revolution.

If the clearing-out or "scavenging" of the exhaust gases were as complete as in a four-stroke cycle cylinder, and if as great a quantity of fresh mixture could be introduced in each charge, and if the mechanical efficiency of the two-stroke engine could be made as high as that of the other, then the two-stroke engine would

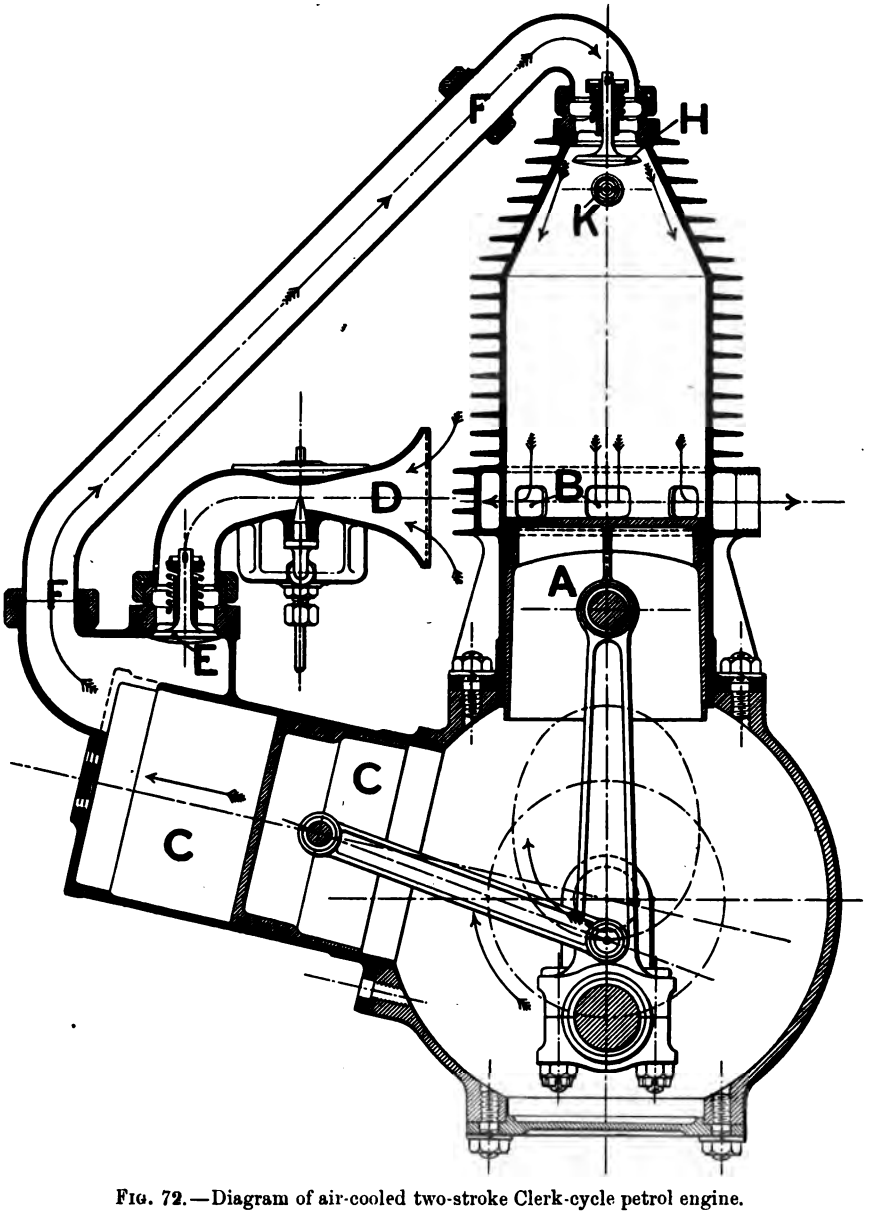

FIG. 72.—Diagram of air-cooled two-stroke Clerk-cycle petrol engine.

develop the same brake mean effective pressure as its rival, and hence at the same revolution speed would give twice as much B.H.P.

In practice, however, this is not realised; the burnt gases must escape during the short interval of time that the exhaust ports B remain open at the end of each working stroke, while the fresh charge has to enter the combustion chamber in practically the same interval; thus the scavenging is imperfect, and hence the amount of the entering fresh charge is less than in the four-stroke engine, wherein there is rather more than one complete stroke given up to each of the operations of exhausting and charging; moreover, the presence of the rather bulky charging pump reduces the mechanical efficiency of the engine.

Engines operating on the Clerk two-stroke cycle have proved very successful in the case of large stationary motors running at revolutions speeds of only 75 to 150 per minute, and many of these, of very large power, are at work, particularly in the well-known Koerting and Oechelhauser types; the defects of the cycle are, however, aggravated in the small quick-speed petrol engine, and accordingly the two-stroke car or aero engine has yet to establish itself in favour. About 1912 a small quick-speed two-stroke Clerk-cycle petrol engine was produced substantially as shown in fig. 72, (except that it was water-cooled), known as the "Dolphin" engine; this showed a fuel consumption at full load and 1000 revolutions per minute of only 0·68 lb. of petrol per B.H.P. hour, with a power output estimated as 1·56 of that of an equal-sized four-stroke engine. Though a well-designed engine, the gain of power by the adoption of the two-stroke mode of working was thus only 56 per cent., while the addition of weight due to the charging pump probably resulted in the weight-power relation being increased rather than diminished.

A very ingenious form of the two-stroke cycle engine was invented by Day in 1891, and is shown diagrammatically in fig. 73. He dispensed altogether with a separate charging pump by causing the crank-chamber CC to perform this function, the lower part of the power piston acting as the pump plunger; he contrived, moreover, to dispense with the inlet valve by arranging for the power piston itself to act as both inlet and exhaust valve. Near the bottom of the down-stroke the piston A first overruns the exhaust port B, and the burnt gases at once rush out; almost

immediately afterwards the inlet port H is opened and the fresh charge—under slight compression in the crank-chamber due to the

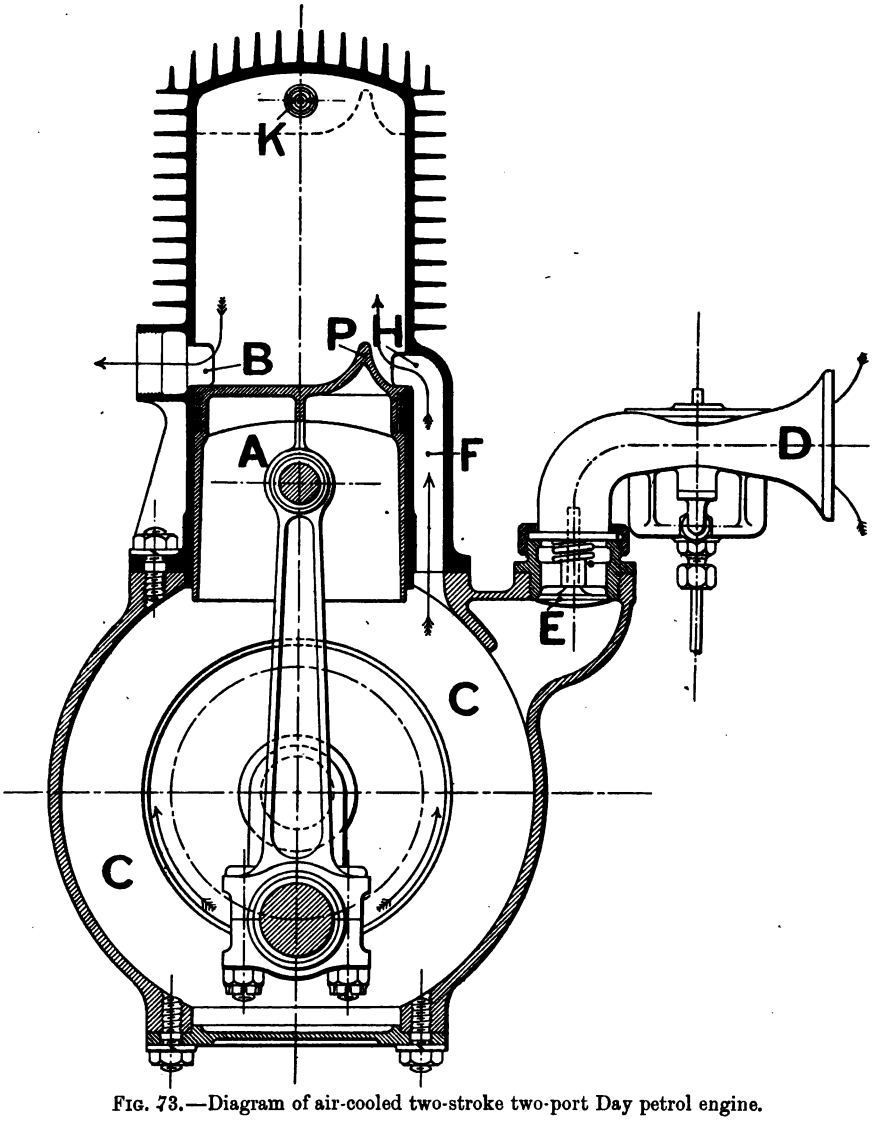

FIG. 73.—Diagram of air-cooled two-stroke two-port Day petrol engine.

descent of the piston—flows into the cylinder through the passage F, and is deflected upwards by a lip P on the piston so as to prevent, as far as possible, any "short-circuiting" through the exhaust B. As in the previous case, the ascent of the piston first

shuts off the ports H and B, and next compresses the fresh charge into the combustion head, when it is fired and the working stroke follows; at the same time there is a partial vacuum caused in the crank-chamber and the suction valve E accordingly opens, admitting a fresh charge of mixture from the carburettor D. This is known as the "two-ported" engine; by connecting the carburettor with a port which is opened by the *lower* edge of the piston when near the *top* of its stroke the valve E can be omitted; this is the "three-ported" Day engine, and in this form the motor is valveless, though in practice it is usual to fit a simple non-return valve in the suction pipe, even in the three-ported type, to reduce the liability to "upset" the mixture.

Though the simplest form of internal-combustion engine that has yet appeared, the Day engine usually suffers in a somewhat marked degree from most of the defects of the two-stroke cycle already referred to; the imperfect scavenging causes the fresh charge taken by the cylinder to become so diluted that great care must be exercised in adjusting the carburettor to give just the requisite strength of mixture, otherwise the engine reverts to a sort of four-stroke cycle, every alternate down-stroke becoming a "scavenging" stroke; thus the Day petrol engine is very "sensitive" on its mixture. Further, there is at low speeds a considerable loss of fresh mixture by short-circuiting across through the exhaust; at high speeds this loss is much reduced, but the volume of fresh charge taken in is then much smaller. Some tests made by Watson and Fenning in 1910 on a small three-ported $3\frac{1}{4}'' \times 3\frac{1}{4}''$ Day petrol engine showed that at 600 r.p.m. 36 per cent. of the fresh charge was lost through the exhaust port, while at 1200 r.p.m. the loss was 20 per cent. The volumetric efficiency was about 40 per cent. at both speeds, the greater loss of fresh charge through the exhaust port at the lower speed counterbalancing the larger volume of charge then entering the cylinder.

The B.H.P. was 4·2 at 1200 r.p.m., and the mechanical efficiency at this speed was 80 per cent., the value of ηp being $51\frac{1}{2}$ lbs. per square inch. Watson and Fenning concluded that this engine gave at 900 r.p.m. about 1·47, and at 1500 r.p.m. about 1·29 of the power of a four-stroke engine of equal bore, stroke, and speed.

Notwithstanding its drawbacks, the combined advantages of simplicity, low production cost, and an impulse every revolution have resulted in very large numbers of these engines in the single-

cylindered form being employed for the propulsion of small motor boats, especially in America; during 1914–15 also a large number of builders of motor bicycles recommenced using engines of this type in the production of light and low-priced machines.

The Day engine is not conveniently arranged in multi-cylinder form, as *each* crank-chamber must be completely enclosed in order that it may operate as a charging pump for its power cylinder.

FIG. 74.—Lamplough two-stroke six-cylinder rotary engine.

It will be clear from inspection of fig. 73 that this engine will run equally well in whichever direction of rotation it is started; if the ignition be advanced when running, a reduction in speed may result in the sudden reversal of the engine, unless care be taken to set the ignition later as the speed falls.

The Lamplough Rotary Aero Engine.—Among the engines shown at the Aero Exhibition at Olympia in 1911 was the six-cylindered two-stroke rotary air-cooled Lamplough engine illustrated in fig. 74. In a single-acting two-stroke rotary engine it is immaterial whether the number of cylinders be odd or even, as

each cylinder contributes one impulse per *revolution*, so that if N be the number of cylinders, the impulses follow one another at equal angular intervals of $\frac{360}{N}$ degrees of rotation.

In the Lamplough rotary aero engine the fresh charges are supplied to the cylinders under small pressure by a rotary blower of special design mounted within a prolongation of the crank-case, as indicated; the charges enter the cylinders through ports near their bottoms, which are overrun by the pistons when near the end of their stroke, while the burnt gases are simultaneously

FIG. 75.—50 H.P. Laviator two-stroke rotary engine.

discharged directly into the atmosphere through mechanically operated valves located in the cylinder heads, as shown; in this way it was sought to improve the exhaust scavenging, and at the same time reduce the loss of fresh mixture by direct passage through the exhaust exit.

The Laviator Two-stroke Rotary Aero Engine.—The French "Laviator" Co., whose normal designs of aero engine are of the four-stroke vertical and vee types, have also attempted a six-cylindered two-stroke engine which may be operated either as a radial or rotary, being rated at 65 B.H.P in the former case and at 50 B.H.P. in the latter—presumably on account of the loss occasioned in this case by the resistance of the air to the rotation of the cylinders, etc.

An external view of this engine is given in fig. 75, while fig. 76 is a diagrammatic section substantially illustrating the method of operation. Each cylinder AA and piston BB is compound, the part of smaller bore the more distant from the crankshaft being the power cylinder, while that of larger bore forms an annular charging pump CC; each charging pump is connected by the external delivery pipe DD with the power cylinder distant 120° from it in

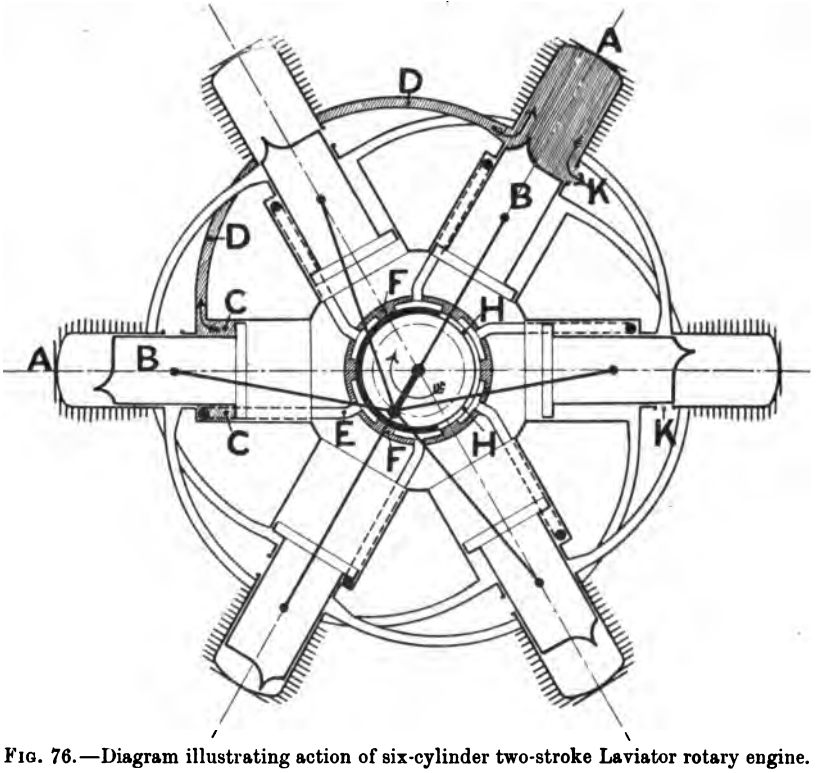

FIG. 76.—Diagram illustrating action of six-cylinder two-stroke Laviator rotary engine.

the direction of relative crankshaft rotation, as shown, while a short suction pipe E connects the pump with one of the ports of a six-ported boss FF of the crank-case, which fits on the hollow crankshaft HH (shown much exaggerated in the diagram to render it visible), through which the fresh mixture is supplied. In the hollow crankshaft is the long slot indicated, which, during the relative rotation of the shaft, registers in succession with the six ports in the boss FF, and thus enables each charging pump in turn to obtain its quantity of fresh charge, which in due course is

delivered to the corresponding power cylinder at the end of its working stroke, the burnt gases simultaneously escaping through exhaust ports KK formed near the bottom of the working barrels. Thus in this engine the method of working included features both of the Clerk and of the Day types, already described.

One of these engines was shown at the Paris Aero Exhibition of 1913; the bore of the power cylinder was 3·94 inches and stroke 5·12 inches; the normal speed was 1200 revolutions per minute, and the engine, when rotary, was rated by the makers as of 50 B.H.P. This corresponds to the moderate piston speed of 1024 feet per minute, while ηp has the very low value of only 44 lbs. per square inch, showing that the engine suffers from the low volumetric and mechanical efficiencies common to small quick-speed two-stroke rotary engines in general. Hence the relation of weight to power is not very good; the total weight of the engine complete was 198 lbs., corresponding to 3·96 lbs. per rated B.H.P.; several four-stroke aero engines already described, notwithstanding the lesser frequency of their working impulses, show a relation of weight to power materially less than this value.

The disadvantages inherent in the small high-speed two-stroke petrol engine have, up to the present, prevented its successful employment in aero service; the multi-cylindered four-stroke engine, arranged in rotary, radial, vertical, or vee formation, continues to occupy the entire field so far as concerns the propulsion of air-craft.

APPENDIX.

LEADING PARTICULARS OF THE PRINCIPAL AERO ENGINES IN 1914.

Name of engine.	Air- or Water-cooled.	No. of cylinders.	Cylinder bore in inches.	Stroke in inches.	Ratio of stroke to bore.	Normal speed. Revs. per min.	Piston speed. Feet per min.	Nominal B.H.P.	Stated weight of engine in lbs.	Weight in lbs. per nominal B.H.P.	Remarks.
I. Horizontal Engines.											
		N.	d.	s.		n.	σ.				
Alvaston . .	W.	2	4·48	4·48	1·00	1200	896	20	95	4·75	Weight without flywheel.
,, . .	W.	2	5·20	5·00	0·96	1200	1000	30	120	4·00	Do. do.
,, . .	W.	4	4·48	5·05	1·12	1200	1010	50	160	3·20	Do., *v.* p. 56 hereof.
Nieuport . .	A.	2	5·32	5·92	1·11	1120	1104	32	173	5·41	
II. Radial Engines.											
Albatross . .	A.	6	4·5	5·0	1·11	1230	1025	50	250	5·00	*v.* p. 95 hereof.
,, . .	W.	6	5·5	5·0	0·91	1230	1025	100	275	2·75	Do.
Anzani . . .	A.	3	4·14	4·73	1·14	1300	1025	30	121	4·0	For description, *v.* pp. 57–78 hereof.
,, . . .	A.	6	3·54	4·73	1·34	1300	1025	45	154	3·4	
,, . . .	A.	6	4·14	4·73	1·14	1300	1025	50–60	200	3·6	Do. do.
,, . . .	A.	10	3·54	5·12	1·44	1250	1065	80	240	3·0	Do. do.
,, . . .	A.	10	4·14	5·52	1·33	1200	1100	100	310	3·1	Do. do.
,, . . .	A.	10	4·53	5·92	1·30	1200	1185	125	460	3·7	Do. do.
,, . . .	A.	20	4·14	5·52	1·33	1300	1200	200	680	3·4	*v.* pp. 75–76 hereof.
Centrum . .	W.	6	5·92	5·52	0·93	900	830	150	..	..	Two-stroke engine.
Edelweiss . .	A.	6	4·53	4·73	1·04	1350	1065	75	276	3·68	*v. Flight* of Feb. 7, 1914.
,, . .	A.	10	4·53	4·73	1·04	1350	1065	125	353	2·82	Do. do.
Hardy & Padmore	..	5	4·0	4·0	1·0	..	..	100	..	..	
Laviator . .	A.	6	3·94	5·12	1·30	1200	1025	65	198	3·05	Rated as 50 B.H.P. when rotary; *v.* pp. 184–186 hereof.
,, . .	W.	6	3·94	5·12	1·30	1300	1105	80	242	3·02	
R.E.P. . . .	A.	7	4·33	6·30	1·45	1100	1153	95	462	4·86	*v.* p. 95 hereof.
Salmson . .	W.	7	4·73	5·52	1·17	1250	1150	90	375	4·17	For description, *v.* pp. 78–95 hereof.
,, . .	W.	9	4·73	5·52	1·17	1250	1150	130	465	3·58	

Name of engine.	Air- or Water-cooled.	No. of cylinders.	Cylinder bore in inches.	Stroke in inches.	Ratio of stroke to bore.	Normal speed. Revs. per min.	Piston speed. Feet per min.	Nominal B.H.P.	Stated weight of engine in lbs.	Weight in lbs. per nominal B.H.P.	Remarks.
II. Radial Engines—*continued*.											
		N.	*d.*	*s.*		*n.*	*σ.*				
Salmson . . .	W.	14	4·73	5·52	1·17	1250	1150	200	660	3·30	Six-stroke cycle; *v.* p. 91.
,, . . .	W.	9	4·73	5·92	1·25	1250	1230	140	..	..	Horizontal radial engine.
,, . . .	W.	9	5·92	8·27	1·4	1200	1650	300	980	3·27	Do. do.
,, . . .	W.	18	5·92	8·27	1·4	1200	1650	600	2460	4·10	Horizontal radial engine; *v.* p. 92 hereof. See also *Flight* of Feb. 21 and Mar. 14 and 28, 1914.
III. Diagonal or "Vee" Engines.											
A.B.C. . . .	W.	4	3·75	3·125	0·835	1450	755	30	110	3·67	See also *The Autocar* of Jan. 4, 1913, and, for the 6 H.P. auxiliary aero engine, *Flight* of Mar. 12, 1915.
,, . . .	W.	6	3·75	3·125	0·835	1450	755	45	175	3·90	
,, . . .	W.	8	3·75	3·125	0·835	1450	755	60	175	2·92	
,, . . .	W.	6	5·00	4·25	0·85	1400	1000	85	220	2·59	
,, . . .	W.	8	5·00	4·25	0·85	1400	1000	115	290	2·52	
,, . . .	W.	12	5·00	4·25	0·85	1400	1000	170	390	2·30	
,, . . .	W.	16	5·00	4·25	0·85	1400	1000	225	490	2·18	
Beatty . . .	W.	8	4·38	4·00	0·915	1450	970	80	280	3·50	Weight includes fly-wheel; *v. Flight* of Oct. 30, 1914.
Clerget . . .	W.	8	5·51	6·31	1·14	1250	1315	200	640	3·20	*v. Flight* of Jan. 31, 1914.
Curtiss . . .	W.	8	4·0	5·0	1·25	1200	1000	75	286	3·81	*v.* also *Flight* of Mar. 21, 1914.
De Dion . . .	A.	8	3·94	4·73	1·20	1700	1340	80	484	6·05	Propeller on cam-shaft; see *Flight* of Jan. 31, 1914.
,, . . .	W.	8	4·92	5·92	1·20	1600	1575	150	968	6·45	
Dorman . . .	W.	8	4·0	4·75	1·19	1300	1030	80	375	4·68	Weight includes fly-wheel; *v.* pp. 111–114.
E.N.V. . . .	W.	8	3·75	6·5	1·73	1620	1750	100	450	4·50	Propeller runs at 900 r.p.m.
Frontier . . .	W.	8	4·13	4·37	1·06	1200	875	60	290	4·83	
Hall-Scott . . .	W.	8	4·0	4·0	1·0	1500	1000	60	265	4·42	
,, . . .	W.	8	4·0	5·0	1·25	1500	1250	80	290	3·63	
Laviator . . .	W.	8	3·94	5·12	1·30	1200	1025	80	275	3·44	Propeller on cam-shaft; *v. Flight* of Feb. 14, 1914.
,, . . .	W.	8	4·48	6·32	1·41	1200	1264	120	418	3·48	Do. do.
,, . . .	W.	8	5·80	6·90	1·19	1100	1265	200	715	3·58	Do. do.
N.E.C. . . .	W.	4	3·69	4·50	1·22	1250	940	50	155	3·10	Two-stroke.
Panhard . . .	W.	8	4·33	5·52	1·27	1500	1380	100	440	4·40	*v.* pp. 118–119 hereof, and *Flight* of Feb. 21, 1914.
Renault . . .	A.	4	3·54	4·73	1·34	1800	1420	25	243	9·7	*v. Flight* of Mar. 14, 1914.
,, . . .	A.	8	2·96	4·73	1·60	1800	1420	40	211	5·3	*v.* pp. 114–118 hereof.

Name of engine.	Air- or Water-cooled.	No. of cylinders.	Cylinder bore in inches.	Stroke in inches.	Ratio of stroke to bore.	Normal speed. Revs. per min.	Piston speed. Feet per min.	Nominal B.H.P.	Stated weight of engine in lbs.	Weight in lbs. per nominal B.H.P.	Remarks.
III. Diagonal or "Vee" Engines—*continued.*											
		N.	*d.*	*s.*		*n.*	*σ.*				
Renault . .	A.	8	3·54	4·73	1·34	1800	1420	50	375	7·5	Special fan cooling; propeller on cam-shaft.
,, . .	A.	8	3·78	5·52	1·46	1800	1656	70	396	5·7	
,, . .	A.	12	3·78	5·52	1·46	1800	1656	100	638	6·4	Cylinders at 60°.
Sunbeam . .	W.	8	3·54	5·92	1·67	2000	1973	150	480	3·2	*v.* p. 114 hereof.
,, . .	W.	12	3·54	5·92	1·67	2000	1973	225	725	3·2	Propeller at 1000 r.p.m.; *v. Flight* of Mar. 28, 1914.
White & Poppe .	W.	8	4·73	6·31	1·33	1200	1260	130	..	..	
Wolseley . .	Semi-W.	8	4·0	5·5	1·38	1800	1650	90	385	4·3	v. pp. 99–111 hereof; in the 90 B.H.P. engines the propeller runs at 900 r.p.m.; *v.* also *Flight* of Mar. 14, 1914.
,, . .	W.	8	3·75	5·5	1·47	1800	1650	90	405	4·5	
,, . .	W.	8	5·0	7·0	1·40	1150	1340	120	640	5·3	
IV. Vertical Engines.											
Argus . . .	W.	4	4·88	5·12	1·05	1250	1070	50	264	5·3	
,, . . .	W.	4	4·88	5·12	1·05	1250	1070	70	287	4·1	
,, . . .	W.	4	5·52	5·52	1·0	1250	1150	100	309	3·09	
,, . . .	W.	4	6·10	6·5	1·07	1250	1350	150	420	2·8	
Argylls . . .	W.	6	4·92	6·88	1·40	1300	1490	130	600	4·6	Weight includes radiator; *v. Flight* of Mar. 21, 1914.
Austro-Daimler .	W.	4	3·94	4·73	1·20	1450	1145	40	165	4·1	*v.* pp. 126–133 hereof.
,, .	W.	4	4·73	5·52	1·17	1350	1240	65	232	3·58	Do. do.
,, .	W.	6	4·73	5·52	1·17	1300	1200	90	316	3·51	*v.* pp. 132–133 hereof.
,, .	W.	6	5·12	6·88	1·34	1200	1375	120	575	4·8	Weight includes radiator.
Bariquand . .	Semi-W.	4	4·42	3·94	0·89	1400	920	30	266	8·9	Air-cooled cylinder heads.
Beatty . . .	W.	4	4·38	4·0	0·915	1450	967	40	180	4·5	*v. Flight* of Oct. 30, 1914.
Benz . . .	W.	6	4·17	5·9	1·42	1350	1330	85	365	4·3	*v. Flight* of Mar. 28, 1914.
,, . . .	W.	4	5·13	7·1	1·38	1288	1525	103	345	3·34	*v.* pp. 146–148 hereof.
Chenu . . .	W.	4	4·33	5·12	1·18	1300	1110	50	257	5·14	*v.* p. 126 hereof.
,, . . .	W.	6	4·33	5·12	1·18	1350	1150	80	394	4·92	*v* pp. 125–126 hereof.
,, . . .	W.	6	5·9	7·88	1·34	1200	1575	200	860	4·3	Also *Flight* of Jan. 31, 1914.
Clement . .	W.	4	3·94	4·73	1·20	1500	1185	40	242	6·05	
,, . .	W.	4	7·48	9·06	1·21	1200	1812	215	1100	5·12	
Clerget . . .	W.	4	4·33	4·73	1·09	1500	1185	50	165	3·3	*v. Flight* of Jan. 31, 1914.
,, . . .	W.	4	5·52	6·30	1·14	1250	1315	100	341	3·41	Do. do.
Curtiss . . .	W.	4	4·0	5·0	1·25	1200	1000	40	162	4·05	*v.* also *Flight* of Mar. 21, 1914, for the 100 H.P. engine.
,, . . .	W.	6	4·0	5·0	1·25	1200	1000	60	256	4·27	

Name of engine.	Air- or Water-cooled.	No. of cylinders.	Cylinder bore in inches.	Stroke in inches.	Ratio of stroke to bore.	Normal speed. Revs. per min.	Piston speed. Feet per min.	Nominal B.H.P.	Stated weight of engine in lbs.	Weight in lbs. per nominal B.H.P.	Remarks.
					IV. VERTICAL ENGINES—*continued*						
		N.	*d.*	*s.*		*n.*	*σ.*				
Daimler-Mercédès	W.	4	4·73	5·52	1·16	1200	1104	70	308	4·4	*v.* pp. 133–136 hereof.
,,	W.	6	4·13	5·52	1·33	1200	1104	80	312	3·9	Do. do.
,,	W.	4	5·52	5·92	1·07	1200	1184	90	400	4·44	Do. do.
,,	W.	6	4·73	5·52	1·16	1200	1104	100	444	4·44	Do. do.
,,	W.	4	6·88	6·49	0·94	1100	1190	120	660	5·5	*v.* also *The Autocar* of Mar. 28, 1914.
,,	W.	8	6·88	6·49	0·94	1100	1190	240	1820	7·58	
Frontier . .	W.	4	4·13	4·37	1·06	1400	1020	35	..	..	
Fox . . .	W.	3	4·0	4·0	1·0	1000	666	45	150	3·34	Two-stroke engine.
,, . . .	W.	4	4·0	4·0	1·0	1000	666	60	190	3·17	Do.
,, . . .	W.	6	4·0	4·0	1·0	1000	666	90	280	3·11	Do
,, . . .	W.	4	4·0	4·0	1·0	1000	666	60	175	2·92	Two-stroke engine opposed.
,, . . .	W.	6	4·0	4·0	1·0	1000	666	90	250	2·78	Do. do.
German Daimler .	W.	4	4·73	5·52	1·17	1400	1290	70	..	..	Inverted engine; *v.* p. 145
Green . . .	W.	4	4·13	4·73	1·14	1100	870	30	182	6·07	*v.* pp. 136–144 hereof.
,, . . .	W.	4	5·52	5·75	1·04	1150	1100	60	302	5·03	
,, . . .	W.	4	5·52	6·0	1·09	1250	1250	65	298	4·58	
,, . . .	W.	6	5·52	6·0	1·09	1250	1250	120	440	3·67	B.H.P. given is actual; *v.* p. 137.
Grey Eagle . .	A.	6	4·0	4·5	1·12	1100	825	50	260	5·2	
Hall-Scott . .	W.	4	4·0	5·0	1·25	1500	1250	44	160	3·64	
Kirkham . .	W.	4	4·13	4·75	1·15	1400	1110	40	180	4·5	
,, . .	W.	6	4·13	4·75	1·15	1300	1030	55	235	4·27	
Laviator . .	W.	6	5·12	6·3	1·23	1100	1155	110	616	5·6	Propeller on cam-shaft.
,, . .	W.	4	5·72	6·9	1·21	1200	1380	120	484	4·03	Propeller on cam-shaft; *v.* also *Flight* of Feb. 14, 1914.
,, . .	W.	6	7·1	7·9	1·11	1050	1380	250	1210	4·84	
Maximotor . .	W.	4	4·5	5·0	1·11	1200	1000	50	210	4·2	
,, . .	W.	6	4·5	5·0	1·11	1200	1000	75	300	4·0	
N.E.C. . . .	W.	6	3·69	4·5	1·22	1250	940	90	320	3·56	
N.A.G. . . .	W.	6	5·92	5·12	0·865	1300	1110	120	770	6·42	
Panhard . .	W.	4	4·33	5·52	1·27	1100	1012	35	220	6·28	*v.* pp. 122–125 hereof.
Rossel-Peugeot .	W.	4	5·52	5·52	1·0	1300	1200	100	352	3·52	
Sturtevant . .	W.	4	4·5	4·5	1·0	1200	900	45	200	4·44	
,, . .	W.	6	4·5	4·5	1·0	1200	900	70	285	4·07	
,, . .	W.	4	4·5	6·0	1·33	1800	1800	100	..	..	Propeller makes 900 r.p.m.; *v.* *Aeronautics* July 1914.

Name of engine.	Air- or Water-cooled.	No. of cylinders.	Cylinder bore in inches.	Stroke in inches.	Ratio of stroke to bore.	Normal speed. Revs. per min.	Piston speed. Feet per min.	Nominal B.H.P.	Stated weight of engine in lbs.	Weight in lbs. per nominal B.H.P.	Remarks.
IV. Vertical Engines—*continued*.											
		N.	*d.*	*s.*		*n.*	*σ.*				
Wessex . . .	W.	6	4·13	5·92	1·43	2200	2160	130	..	..	Propeller at half speed?.
Wright . . .	Semi-W.	4	4·38	4·0	0·915	1600	1065	39	190	4·88	Cylinder heads air-cooled; *v.* pp. 121–122 hereof.
,, . . .	W.	6	4·38	4·0	0·915	1150	765	50	230	4·6	
V. Rotary Engines.											
Adams-Farwell .	A.	5	6·0	6·0	1·0	950	950	72	285	3·96	
British Rotary .	A.	10	4·88	5·52	1·13	1100	1010	100	..	..	
Burlat . . .	A.	8	3·74	4·73	1·27	950	750	35	187	5·34	For description, *v.* pp. 171–175 of this book.
,, . . .	A.	8	4·73	4·73	1·0	950	750	60	264	4·40	
,, . . .	A.	8	4·73	6·70	1·41	950	1060	75	308	4·10	
,, . . .	A.	16	4·73	4·73	1·0	900	710	120	495	4·13	
Clerget . . .	A.	7	4·73	4·73	1·0	1200	945	60	198	3·30	*v. Flight* of Jan. 31, 1914.
,, . .	A.	7	4·73	5·90	1·25	1200	1180	80	216	2·70	*v.* p. 171 hereof.
Demont . .	A.	6	6·9	3·15	0·457	2000	1050	300	220	0·73	*v.* pp. 175–177 hereof.
D'Henain . .	A.	7	..	..	..	..	..	50	..	..	*v.* p. 171 hereof; and *Flight* of Feb. 7, 1914.
E.J.C. . . .	A.	6	3·94	3·94	1·00	2000	1310	60	185	3·1	Do. do.
Esselbé . . .	A.	7	4·33	4·73	1·09	1250	990	65	167	2·57	*v. Flight* of Feb. 7, 1914.
Gnome . . .	A.	7	4·35	4·73	1·09	1200	945	50	172	3·44	For description, *v.* pp. 151–164 of this book.
,, . . .	A.	7	4·73	4·73	1·0	1200	945	60	192	3·20	
,, . . .	A.	7	4·88	5·52	1·13	1200	1105	80	207	2·59	
,, . . .	A.	9	4·88	5·90	1·21	1200	1180	100	297	2·97	*v.* also *Flight* of Feb. 14, Mar. 14, and Mar. 28, 1914.
,, . . .	A.	14	4·35	4·73	1·09	1200	945	100	308	3·08	
,, . . .	A.	14	4·73	4·73	1·0	1200	945	120	297	2·48	Do. do.
,, . . .	A.	14	4·88	5·52	1·13	1200	1100	160	396	2·46	Do. do.
,, . . .	A.	18	4·88	5·90	1·21	1200	1180	200	540	2·70	*v.* pp. 162–163 hereof.
Gnome (1-Valve) .	A.	7	4·33	5·90	1·36	1200	1180	80	..	..	*v.* pp. 164–167 hereof, for description.
,, .	A.	9	4·33	5·90	1·36	1200	1180	100	..	..	
Gyro . . .	A.	7	4·33	4·73	1·09	1150	910	50	160	3·2	*v.* pp. 167–170 hereof, and *Flight* of Sept. 25, 1914.
,, . . .	A.	7	..	..	..	1275	..	80	200	2·5	
Hart . . .	A.	9	5·0	6·0	1·2	1600	1600	150	..	..	
Isaacson . .	A.	9	4·73	5·90	1·25	1200	1180	100	250	2·5	*v. Flight* of Mar. 21 and Mar. 28, 1914.
,, . .	A.	18	4·73	5·90	1·25	1200	1180	200	465	2·33	Do. do.
Laviator . .	A.	6	3·94	5·12	1·30	1200	1025	50	198	3·96	*v.* pp. 184–186 hereof.
Le Rhone . .	A.	7	4·13	5·52	1·34	1200	1100	50	183	3·67	For description, *v.* pp. 170–171 hereof; also *Flight* of Feb. 14, 1914.

Name of engine.	Air- or Water-cooled.	No. of cylinders.	Cylinder bore in inches.	Stroke in inches.	Ratio of stroke to bore.	Normal speed. Revs. per min.	Piston speed. Feet per min.	Nominal B.H.P.	Stated weight of engine in lbs.	Weight in lbs. per nominal B.H.P.	Remarks.
V. Rotary Engines—*continued.*											
		N.	*d.*	*s.*		*n.*	*σ.*				
Le Rhone . .	A.	9	4·13	5·52	1·34	1200	1100	80	245	3·06	
,, . .	A.	11	4·13	5·52	1·34	1200	1100	100	297	2·97	
,, . .	A.	14	4·13	5·52	1·34	1200	1100	120	375	3·12	For description, *v.* pp. 170–171 hereof; also *Flight* of Feb. 14, 1914.
,, . .	A.	18	4·13	5·52	1·34	1200	1100	160	464	2·90	Do. do.
Rossel-Peugeot .	A.	7	4·29	4·33	1·01	1100	800	30	165	5·5	
,, .	A.	7	4·33	4·33	1·0	1100	800	40	172	4·3	
,, .	A.	7	4·33	4·33	1·0	1150	830	50	165	3·3	
S.H.K. . . .	A.	7	4·33	5·52	1·27	1200	1100	70	154	2·2	For description, *v. Flight* of Feb. 21, 1914.
,, . . .	A.	7	4·88	5·52	1·13	1200	1100	90	198	2·2	
,, . . .	A.	14	4·33	5·52	1·27	1200	1100	140	308	2·2	Do. do.
,, . . .	A.	14	4·88	5·52	1·13	1200	1100	180	396	2·2	Do. do.
Statax . . .	A.	3	2·28	2·36	1·035	1400	550	10	60	6·0	*v. Flight* of Mar. 14 and Mar. 28, 1914.
,, . . .	A.	5	3·94	4·73	1·20	1200	945	40	200	5·0	
Verdet . . .	A.	7	4·42	5·52	1·25	1100	1010	55	176	3·2	

INDEX.

A.B.C. ENGINES, 98, 99, 119.
Absolute temperature, 5.
Adiabatic expansion, 7–9, 11–13, 21, 22, 25.
Adlershof Institute engine trials, 144–149.
Aero engine trials, 1914, 136.
Aero engines of 1910, 51–52.
of 1914, principal, *Appendix*, 187.
Aero Exhibition, Paris, 1913, 120, 175, 186.
Air, characteristic equation of, 5.
-cooled Renault engines, 114–118.
-cooling, estimation of, 41.
engines, 4–17.
-petrol mixtures, 41–42.
resistance of, 45, 48, 150, 184.
speed, 46.
standard of efficiency, 23, 39, 40.
Albatross engine, 95.
Alvaston engine, 56.
Angle, gliding, 46.
Anzani engines, 57–78.
fan engine, 57–61.
Appendix: engines of 1914, 187.
Atlantic flight, the, 47–49.
Attachment of engine to aeroplane, 62, 63, 117, 152, 162.
Austro-Daimler engines, 126–133.
Automatic inlet valves, 57, 65, 69, 121, 158, 167, 178, 180.
Auxiliary exhaust ports, 55, 56, 112, 169.
Average weight of engines, 4.

BALANCING radial and rotary engines, 94, 160.
Beau de Rochas, 17.
Beck rotary motor, 51.
Benz engine, 146–147.
Berriman, A. E., 47–48.
Blériot's cross-channel flight, 50, 57.
Blount, B., 25.
Bohm's 24-hour flight, 136.
Bosch "shield" magneto, 89, 117.
Brake horse-power, 4, 33, 36, 43, 52, 109, 126.
mean effective pressure, 34, 37, 38, 62, 65, 92, 100, 109, 118, 126, 132, 133, 136, 137, 146, 162, 177, 182, 186.
relative thermal efficiency, 40.
thermal efficiency, 39, 59, 63, 94, 111, 125, 126, 147.
British thermal unit, 5.
Brooklands 1912 power tests, 38.
Burlat engine, 51, 171–175.

CAM arrangement in Anzani engines, 70–75.
Canton-Unné, 78.
Carburettor, Wolseley, 110.
Carnot heat engine, 9–17.
Castor oil, 156.
Chenu engines, 125–126.
Civil engineers' efficiency standard, 39.
Clark, Graham, 120.
Clerget engines, 119, 171.
Clerk, Dugald, 27, 31, 40, 178–180.
Climbing power, 44–45.
Collectors, exhaust, 69, 80, 89.
Combined valves, 123–124.
Complete combustion, 27.
inflammation, 27.
Compression, 8, 10, 11, 15, 20, 22, 23, 25, 28, 29, 30, 31.
Cooling, air required for, 41, 96.
water, 41, 87, 96, 140–141.
Crankshaft diameter by calculation, 101–103, 110, 111, 113, 137.
Critchley, J. S., 51.
Curves pv^n = constant, 6, 7.
Cycles: Carnot, 10–12; Otto, 17, 20–22.
Cylinders, 17, 18, 59, 62, 67, 71, 86, 92, 97, 100, 104, 111, 114, 115, 118, 121, 122, 125, 128, 133, 136, 140, 145, 146, 154–156, 162, 167, 170, 171, 175, 178, 181–182, 185.

DAIMLER, Gottlieb, 1, 2.
Darracq horizontal engine, 53, 56.
Day two-stroke engine, 180–183.
De Dion engines, 98, 99, 102, 118.
"Demoiselle," the, 55.
Demont double-acting engine, 175–177.
Desaxé engines, 67, 77, 78, 128, 140.
D'Henain engine, 171.
Diagonal engines, 52, 97–119.
Diagrams, indicator, 10, 14, 19, 21, 24, 29, 30, 33.
Diesel engines, 4, 16.
Dirigibles, engines of, 44, 79, 108, 136.
Displacement in relation to power, 43.
Dissociation, 26.
"Dolphin" two-stroke engine, 179–180.

Dorman engine, 111–114.
Double-acting engines, 32, 175, 177, 178.
Double ignition, 90, 128, 135–136, 148, 176.
Dudbridge Co., 78, 93.
Dumont, Santos, 55.
Dutheil-Chambers engines, 53, 56.

EFFICIENCY, air standard, 39, 40.
brake thermal, 39.
maximum practically attainable, 23.
mechanical, 34.
of Otto, or four-stroke, cycle, 22–23.
of perfect heat engine, 13, 14.
relative brake thermal, 40.
volumetric, 41–43.
Eighteen-cylinder Gnome engine, 162–163.
E.J.C. rotary engine, 171.
Epicyclic trains, 83–84, 159–160, 176.
ηp, *see* Brake mean effective pressure.
Ericsson hot-air engine, 17.
Expansion of gases, 6–9, 28.
Explosion, time of, 27, 31, 157–158.
External-combustion engines, 4, 17.

FAN-COOLED Renault engines, 115–118.
Fan type engines, 57, 61, 95.
Farcot engine, 95.
Firing order, 53, 54, 59, 61, 71, 76, 89, 93, 97, 98, 129, 157, 177.
Flywheels, 59, 114, 136, 138, 139.
Four-stroke cycle, efficiency of, 21–23.
engine, typical, 18–21.
Fourteen-cylinder Gnome engine, 161.
Salmson engine, 91–93.
Frequency of impulses, 53, 54, 59, 61, 70, 76, 92, 98, 129, 157, 162, 177, 184.

GARROS' Mediterranean flight, 47.
Gas, mean velocity through valves, 107–108, 132, 141.
Geared-down propellers, 64, 78–79, 92–93, 95, 99, 114, 117, 118, 119, 121–122, 125, 171, 175.
German aero engines, 56, 121, 133–136, 144–149.
Gliding angle, the, 44, 46.
Gnome engines, two-valve, 150–164.
Monosoupape engines, 164–167.
Gobron-Brillié, 54.
Gordon-Bennett competition, 50.
Graphs, power-speed, 35–37.
Green engine, the, 136–144.
Gyro engine, the, 167–170.

HEAT measurement, 5.
engines, 9–31.
Height record, Oelerich's, 133.
Horizontal aero engines, 53–56.
radial engines, 78–80, 95.
stationary engines, 2–4.
Horse-power, 32–39.
Hot-air engines, 4, 9–17.

Huyghens, 17.
Hypocycloid, the straight-line, 172.

IDEAL efficiency of four-stroke cycle, 21–23, 39–40.
Ignition, 59, 61, 68, 75–76, 89–90, 92–93, 97–98, 107, 117, 128, 135–136, 141, 148, 157, 176.
double, 90, 128, 135–136, 148, 176.
Impulses, sequence of, 53, 54, 59, 61, 71, 76, 91, 92, 93, 97–98, 129, 157, 162, 177, 178, 183–184.
Indicated horse-power, 32–33.
Indicator diagrams, 14, 20, 21, 24, 28–30, 33.
Inflammation, 27.
Inlet valves, 18, 20, 57, 69, 90–91, 95, 107, 108, 113, 114, 115, 121, 123–125, 129–132, 133, 135, 141, 144, 145, 148, 158–159, 164, 167, 170, 171, 176, 178, 180, 182.
Internal-combustion engines, 4, 17, 18–20, 182.
energy of gas, 8, 9, 11.
Inverted Daimler aero engine, 144–146.
Seal marine engine, 144–146.
Isothermal expansion, 7, 8, 10–12.

JACKET cooling water, 41, 86–87, 104–105, 121, 122, 128, 140.
Jacketed carburettors, 89, 106, 129, 136, 145, 147–148.
J.A.P. engine, 50.
Joule's equivalent, J, 5, 7, 26.

KEROSENE engines, weight of, 4.
Koerting engines, 180.

LAMINATED valve springs, 130–131, 159.
Lamplough two-stroke engine, 183–184.
Lanchester, F. W., 47, 48, 159.
Laviator engines, 119, 184–186.
L-engines, 19.
Le Rhone engines, 170–171.
Lift-resistance ratio, 48.
Lightness necessary in aero engines, 44–50.
Lilienthal's gliders, 46.
Lloyd's rule for crankshafts, 102, 113, 137.
Loss of heat, 23, 28, 29, 31, 41.
Lubrication, 18, 56, 62, 68, 76–77, 80, 88–89, 92, 100, 105–106, 111, 113, 115–116, 126, 128, 141, 144, 147, 148, 156, 164, 166.

MAGNETO, "shield" type, 89, 90, 107.
Maintenance of Gnome engines, 161.
Marine motors, weight of, 4.
Maximum B.H.P., 35–36.
ηp, 37.
shear stress in shaft, 110.
thermal efficiency, 9, 13, 14, 23.
torque, 37.

Mean effective pressure, 15, 17, 30, 32, 33, 34.
Mechanical efficiency, 33, 34.
Mercédès-Daimler engines, 133–136.
Moment, turning, 34–37.
Monosoupape Gnome engines, 164–167.

N.E.C. ENGINES, 119.
Necessity of lightness in aero engines, 44–50.
Number of cylinders in aero engines, 3.

OBLIQUITY of connecting-rod, 77, 151, 176.
Odd number of cylinders, when necessary, 70–71.
Oelerich's height record, 133.
Offset cylinders, 67, 77–78, 128, 131, 140, 142.
Oil, castor, in Gnome engines, 156.
consumption of, 47, 62, 64, 92, 94, 100, 111, 126, 132, 147.
pumps, 68, 105–106, 128, 141.
Omnibus motor, engines of, 65.
Operation of valves, 18–20, 55, 56, 57, 69–75, 90–91, 95, 108, 114, 115, 121, 123–125, 130–132, 133, 135, 142, 144, 145, 148, 158–159, 165, 167–169, 170, 176.
Opposed horizontal engines, 53–54.
Optical indicator, 33.
Ordinary and absolute temperature, 5.
Otto, 17, 18.

PALONS & BEUSE engine, 56.
Panhard engines, 118–119, 122–125.
Paris Aero Exhibition, 175, 186.
Pelterie, R. E., 57, 95.
Perfect heat engines, 9–14.
Petrol consumption, 41, 47, 59, 62, 92, 94, 100, 111, 114, 125, 126, 132, 133, 146, 148, 164, 180.
Petrol-air mixtures, 41–42.
Pipe engines, 99, 123.
Piston displacement, 43.
-speed, 34, 62, 92, 94, 100, 111, 114, 118, 125–126, 132, 136, 146, 162.
Pistons, 18, 67, 86, 103, 113, 122–123, 133, 139, 154, 164, 175–176, 181, 185.
Power rating formulæ, 37–39.
-speed graphs, 35–37.
Pre-ignition, 29.
Propellers, 45, 48, 49, 55, 57, 66, 79, 92–93, 117, 120, 121, 148, 150, 151, 161, 162, 171, 175.

R.A.C. FORMULA, 38.
Radial aero engines, 57–96.
Radiators, 41, 87, 114, 119, 126, 146.
Range of petrol-air mixtures, 41–42.
of speed of aeroplanes, 49.
Rating formulæ, 37–39.
Relative brake thermal efficiency, 40.
Renault aero engines, 99, 114–118.
R.E.P. engines, 57, 95.
Revolution speeds, 2, 3, 16, 17, 36, 39, 55, 59, 62, 64, 92, 94, 100, 111, 117–119, 122, 125–126, 132–133, 136, 137, 145–146, 162, 167, 170, 171, 177, 186.
Roe, A. V., 50.
Rotary engines, 2, 3, 150–186.
Running and maintenance, 161.

SALMSON engines, 78–95.
Santos Dumont, 55.
"Scavenging," 178–179, 182.
Seal engine, the, 145.
Séguin, Laurent, 150.
Seven-cylinder Gnome, 151–153.
Shear stress in crankshaft, 110, 111.
Similar engines, weight of, 3.
Six-stroke cycle engine, 91–93.
Spark advance in Gnome engine, 157–158.
Specific heat of air, 5, 6.
Standard of efficiency, 39.
Stationary engines, 2–4.
Stiffness of crankshafts, 102.
Straight-line hypocycloid, 172–173.
Stress in cylinders of Gnome engine, 155–156.
Stroke, 16, 17, 55, 59, 62, 92, 100, 111, 114, 118, 122, 125, 132, 136, 137, 146, 162, 167, 171, 174, 176, 177, 186.
Sunbeam engines, 114.

T-ARRANGEMENT of cylinders, 18.
Temperature, absolute, 5.
changes, adiabatic, 9.
of explosion, 27, 31.
limits, 13.
Ten-cylinder Anzani engine, 62–63, 92.
Thermal efficiencies, 13, 21–23, 31, 39, 40.
unit, British, 5.
Time of explosion, 27, 158.
Timing of valves, 91, 160.
Torque, 34–37, 110.
Treasury rating formula, 38–39.
Turbulence, 31.
Twelve-cylinder engines, 99, 114, 115, 118.
Twenty-cylinder engine, 75–76.
Two-stroke engines, 177–186.
Typical four-stroke engine, 19.

USEFUL work, 13, 22, 26.
Ubas steel valve cages, 113.
Unwin, 111.

VALVE actuation, *see* Operation of valves.
figure, comparative, for engines, 146.
Valveless engines, 182, 184–186.
Valves, 18–20, 69, 90, 95, 107–108, 115, 123–125, 129–132, 133, 141, 144–145, 148, 158–160, 165–169, 170–171, 176.
Vee engines, 97–119, 123.

Velocity of gases, mean, through valves, 107–108, 132, 141.
Vertical engines, 120–149.
Volumetric efficiency, 41–43, 59.

WATER, cooling, 41, 87, 96, 140–141.
Watson, Dr W., 33, 42, 182.
Weight of aeroplanes, 45, 50, 55.
Weights per B.H.P., 2, 4, 59, 62, 92, 100, 114, 118–119, 122, 125–126, 132–133, 136–137, 146–148, 162, 170–171, 177, 186.
Weights, average, of engines, 4.
a comparison of, 2.
of similar engines, 3.
Wing loading, average values, 46.
Wolseley aero engines, 99–111.
Working fluid, the, 28.
substance, the, 9.
Wright aero engine, 121–122.

Y ANZANI engine, 61.

ZENITH carburettor, 68, 75, 89, 141.

PRINTED IN GREAT BRITAIN BY NEILL AND CO., LTD., EDINBURGH.

89090516451

b89090516451a

may be kept
DURT